SW 4th Ave Utility Undergrounding
Trimark Properties

June 7, 2017

D.E. SCORPIO CORPORATION

Integrity. Quality. Service.

D.E.SCORPIO CORPORATION
construction management • design build

June 7, 2017

Mr. John Fleming
Trimark Properties
321 SW 13th Street
Gainesville, FL 32601

Re: 4th Avenue Utility Undergrounding, Guaranteed Maximum Price Proposal- Revision 2

Dear John,

We are pleased to provide you this revised Guaranteed Maximum Price (GMP) Proposal for the Undergrounding of overhead utilities along SW 4th Avenue. Attached is a detailed estimate and Qualifications / Assumptions used in preparing this proposal.

The Proposal is broken into a base bid, which includes the demolition, trenching, new underground conduit runs, backfill, and surface restoration per the documents prepared by CHW and dated 3/15/17. The installation of site lighting was treated as add/alternates to this base bid.

- Our GMP Proposal for the Base Bid Scope is $367,754.
- Alternate # 1- which includes conductors and street lights for the south side 4th Ave is $70,195
- Alternate # 2- which includes conductors and street lights for the north side 4th Ave is $83,021

Total Project cost if both alternates are accepted is $520,970

Please let us know of any questions or concerns you have regarding this proposal. We would be happy to meet with you and your staff to review.

Sincerely,

Brandon Tinckham
Senior Project Manager

2700 NW 43rd Street, Suite B • Gainesville, FL 32606
o 352.363.6070 · f 352.363.6071 · descorpiocorp.com
CGC 061834

Bid Pkg #	Description	Takeoff Quantity	Total Cost/Unit	Total Amount	Notes
	STAFF & GENERAL CONDITIONS				
00GC1	**Staffing, Vehicles, Technology**				
	Project Manager	3.00 week	2,900.00 /week	8,700	
	Superintendent	3.00 week	1,600.00 /week	4,800	
	Vehicles - Insurance and Maintenance Included	6.00 week	175.00 /week	1,050	
	Vehicles - Fuel	6.00 week	70.00 /week	420	
	Field Technology - iPad, Software, PC	6.00 week	80.00 /week	480	
	Cell Phone (service & maintenance incl.)	6.00 week	25.20 /week	151	
	00GC1 Staffing, Vehicles, Technology	**3.00 wk**	**5,200.40 /wk**	**15,601**	
00GC2	**General Conditions**				
	Document Reproduction	2.00 mnth	200.00 /mnth	400	
	Supplies (office)	1.00 ls	240.00 /ls	240	
	As-Built Drawings	1.00 ls	250.00 /ls	250	
	00GC2 General Conditions	**3.00 wk**	**296.67 /wk**	**890**	
00GC3	**General Requirements**				
	Materials Testing Package - GC	1.00 ls	1,800.00 /ls	1,800	
	Temporary Toilets	4.00 mnth	90.00 /mnth	360	
	Small Equipment Rental	1.00 ls	300.00 /ls	300	
	Temporary Protection - Weather	1.00 ls	1,500.00 /ls	1,500	
	Construction Security Fence	250.00 lnft	7.50 /lnft	1,875	
	Dumpster Rental	5.00 pull	250.00 /pull	1,250	
	Survey: Final	1.00 ls	1,800.00 /ls	1,800	
	00GC3 General Requirements	**3.00 wk**	**2,961.67 /wk**	**8,885**	
	STAFF & GENERAL CONDITIONS	**3.00 wk**	**8,458.73 /wk**	**25,376**	
	SEGMENT 1				
31A	**SITEWORK**				
	GRU Electric	1.00 ls	26,800.00 /ls	26,800	
	GRUcom	1.00 ls	10,050.00 /ls	10,050	
	Cox	1.00 ls	3,000.00 /ls	3,000	
	Additional 2" conduit for Cox	440.00 lf	3.42 /lf	1,505	
	AT&T	1.00 ls	3,450.00 /ls	3,450	
	Street Lighting (conduit for refeading existing)	1.00 ls	1,450.00 /ls	1,450	
	MOT	1.00 ls	4,000.00 /ls	4,000	
	Sod	780.00 sf	0.40 /sf	312	
	Curb Replacement Allowance	1.00 ls	2,200.00 /ls	2,200	
	Import Fill Allowance	1.00 ls	4,000.00 /ls	4,000	
	31A SITEWORK			**56,767**	
	SEGMENT 1			**56,767**	
	SEGMENT 2				
31A	**SITEWORK**				
	GRU Electric	1.00 ls	62,500.00 /ls	62,500	
	GRUcom	1.00 ls	16,500.00 /ls	16,500	
	Cox	1.00 ls	12,600.00 /ls	12,600	
	Additional 2" conduit for Cox	420.00 lf	3.42 /lf	1,436	
	AT&T	1.00 ls	21,100.00 /ls	21,100	
	Street Lighting (conduit for refeading existing)	1.00 ls	5,200.00 /ls	5,200	
	MOT	1.00 ls	5,000.00 /ls	5,000	
	Sod	2,650.00 sf	0.40 /sf	1,060	
	Transformer Pads	300.00 sf	10.00 /sf	3,000	
	Curb Replacement Allowance	1.00 ls	3,800.00 /ls	3,800	
	Import Fill Allowance	1.00 ls	10,000.00 /ls	10,000	
	Tree Removal Allowance	1.00 ls	4,000.00 /ls	4,000	
	31A SITEWORK			**146,196**	
	SEGMENT 2			**146,196**	
	SEGMENT 3				
31A	**SITEWORK**				
	GRU Electric	1.00 ls	52,730.00 /ls	52,730	
	GRUcom	1.00 ls	8,475.00 /ls	8,475	
	Cox	1.00 ls	4,600.00 /ls	4,600	
	AT&T	1.00 ls	8,500.00 /ls	8,500	
	Street Lighting (conduit for refeading existing)	1.00 ls	200.00 /ls	200	
	MOT	1.00 ls	6,000.00 /ls	6,000	
	Sod	900.00 sf	0.40 /sf	360	

Bid Pkg #	Description	Takeoff Quantity	Total Cost/Unit	Total Amount	Notes
31A	SITEWORK				
	Curb Replacement Allowance	1.00 ls	3,000.00 /ls	3,000	
	Import Fill Allowance	1.00 ls	6,000.00 /ls	6,000	
	31A SITEWORK			89,865	
	SEGMENT 3			**89,865**	

Estimate Totals

Description	Amount	Totals	Rate
		318,204	
Contingency	15,910		5.00 %
Bld Permit (use calculator)			
Impact Fees (by owner)			
Water Management District			
Insurance: Builder's Risk	1,920		0.60 %
Insurance: General Liability	1,591		0.50 %
SUBTOTAL	**19,421**	**337,625**	
Preconstruction Services			
OH&P	27,010		8.00 %
SUBTOTAL	**27,010**	**364,635**	
P&P Bond	3,119		
Total		***367,754***	

June 7, 2017

QUALIFICATIONS / CLARIFICATIONS
9th Street Urban Walkway

GUARANTEED MAXIMUM PRICE- revision 2

This Guaranteed Maximum Price includes the complete construction of the SW 4th Ave Utility Undergrounding project. This includes demolition as necessary for trenching, excavation, installation of conduits, backfill, and replacement of surface construction. Surface conditions are replaced to replicate the current conditions, not as indicated in the CHW plans. These qualifications shall be incorporated in the Project Documents prior to construction.

Base Bid - $367,754.00

Alternate 1- Site Lighting on the south side of SW 4th Ave - $70,195
Alternate 2- Site Lighting on the north side of SW 4th Ave - $83,021

Total if both Alternates are accepted - $520,970

Qualifications & Clarifications
GENERAL
Items included by the D.E. Scorpio Corporation:

- Performance & Payment bond
- Builders Risk and General Liability Insurances
- Material testing
- Construction surveying, including final certified survey of underground utilities
- As-built documentation
- Estimate is based on project starting within the next 60 days
- Staff, General Conditions and General Requirements are included as fixed lump sums that will be billed in equal parts.
- A CM Contingency of 5% is included. The CM Contingency shall be utilized to ensure the project is completed as scheduled, for the funding of errors or omissions during the buy-out process, or supplementing trade contractor work forces should the need arise. Prior approval will be requested from the Owner, which shall not be unreasonably withheld.

Items excluded by the D.E. Scorpio Corporation:

- Federal, State, County or City impact fees
- Utility connection fees and tapping fees
- Building Permit cost
- NPDES , SJRWM fees
- Tree mitigation cost
- Relocations, bypasses or support of unknown existing utilities during excavation to complete new construction work that is not detailed and specifically addressed in the contract documents
- Sub-surface dewatering. Surface dewatering is included.

PROJECT SPECIFIC QUALIFICATIONS

- Directional Bore is included for the GRUCom crossing of SW 10th Street only in the base bid. Directional bore across 4th and along the north side of 4th in is included in Alternate # 2.
- MOT assumes the closing of all roadways that are being trenched. One lane closures are not included.
- Costs for demolition, trenching, and surface feature re-construction are pro-rated in each of the provider costs. Pro-rating was determined based on the value of the work for each provider.
- An allowance has been included for repair or replacement of curbing as may be required, up to 360 lf, calculated at $25/lf.
- An allowance has been included for the removal of the tree in Segment 2 in the parking island in front of the Gainesville Dojo. Tree mitigation, replacement or utility re-work necessary for removal of this tree is not included.
- An allowance has been included for the import of clean fill if excavated material is considered unsuitable for backfill. It is assumed that the majority of excavated material will be suitable for backfill. This will be priced using unit prices of $8/cy for import and $7/cy for export.
- MOT engineering costs for site work is included.
- Any costs associated with unforeseen conditions or utilities not indicated on the drawings are excluded.
- Industry standard protection of adjacent surfaces, utilities, etc will be employed during construction of the new utilities. DE Scorpio will not be responsible for utilities or structures that are compromised due to age or a previously existing condition that leads to compromise or failure.
- It is assumed that construction fencing at the Ingenuity construction site will be relocated by the Ingenuity CM. Replacement sidewalks and landscaping along the north boundary of the Ajax jobsite are not included.
- Alternates 1 and 2 prices are not independent. Alternate 2 price assumes Alternate 1 was approved as the Alternate 1 price includes the service wire to SW 5th Ave to power the lights.

CONTRACTOR TO OPEN, CUT, & REPAIR PAVEMENT AS NECESSARY FOR INSTALLATION OF UTILITIES. REFER TO FDOT INDEX NO. 307 AND C0.10 FOR DETAILS. RESTORE ALL STRIPING TO EXISTING OR BETTER CONDITIONS PER FDOT INDEX NO. 17346.

CONTRACTOR TO OPEN, CUT, & REPAIR SIDEWALK AS NECESSARY FOR INSTALLATION OF UTILITIES. REPAIR SIDEWALK/CURB RAMPS TO EXISTING OR BETTER CONDITIONS.

GENERAL NOTE-

1. CONTRACTOR SHALL TERMINATE CONDUIT AT ALL GRU PULL BOXES AND UNDERGROUND JUNCTION BOXES PER GRU ENERGY SERVICE DELIVERY GUIDE.

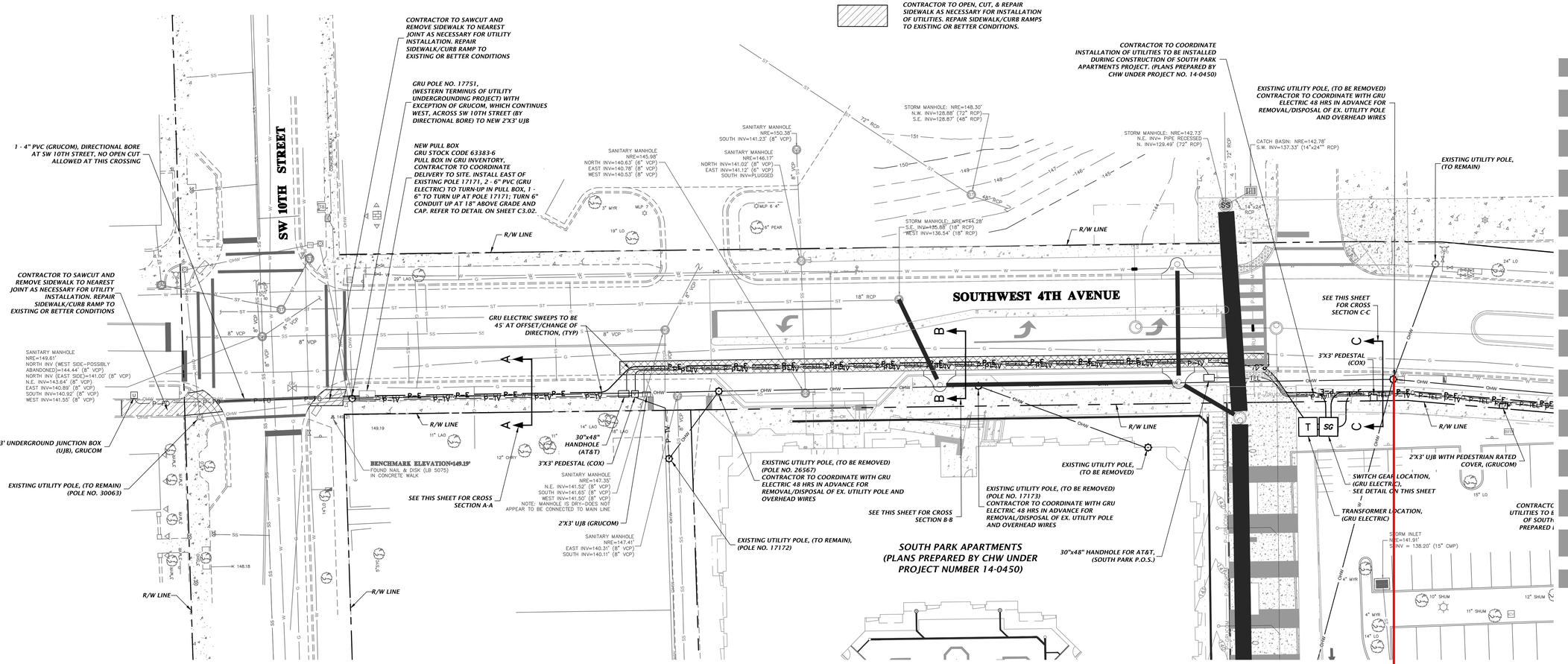

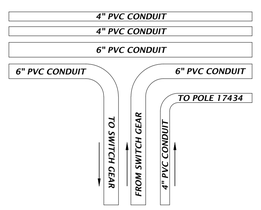

SWITCH GEAR CONDUIT DETAIL

NTS

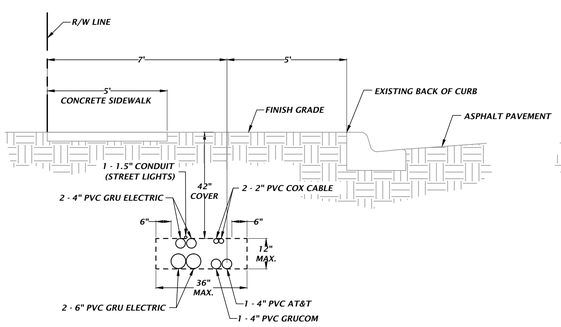

TYPICAL JOINT TRENCH BUNDLE CROSS SECTION A-A

NTS

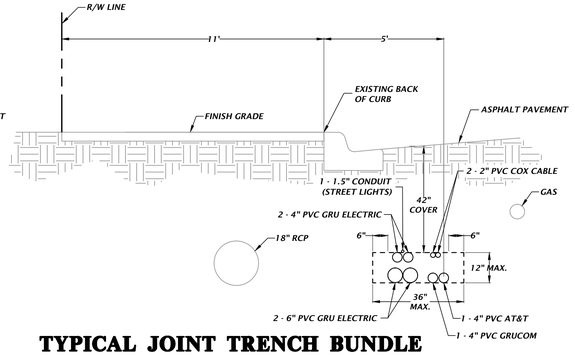

TYPICAL JOINT TRENCH BUNDLE CROSS SECTION B-B

NTS

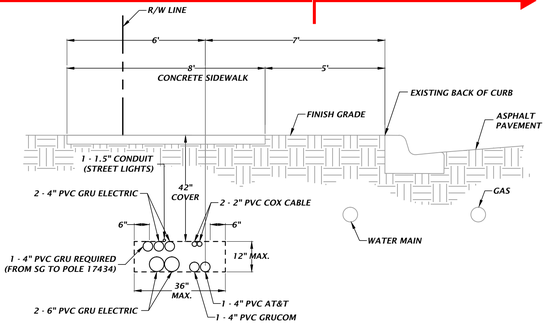

TYPICAL JOINT TRENCH BUNDLE CROSS SECTION C-C

NTS

132 NW 76th Drive
Gainesville, FL 32607
(352) 331-1976, (352) 331-2476
www.chw-inc.com
est. 1988 FLORIDA CA-5075
CHW Professional Consultants

SCALE: 1" = 20'

VERIFY SCALE BAR IS 1" INCH ON THIS SHEET. IF NOT ONE INCH ON THIS SHEET, ADJUST SCALES ACCORDINGLY.

CONSTRUCTION/BID REVISIONS:

SUBMITTALS:
11/08/16 – COG R/W PERMIT
03/15/17 – COG R/W PERMIT UPDATE

CLIENT: TRIMARK PROPERTIES

PROJECT: SW 4TH AVENUE OVERHEAD UTILITY UNDERGROUNDING PLAN

SHEET TITLE: CONDUIT PLANS

TECHNICIAN: J. THOMAS
DESIGNED: R. WALPOLE
DRAWN: J. THOMAS
QUALITY CONTROL: R. WALPOLE
PROJECT NUMBER: 14-0450

ROBERT J. WALPOLE

FL PE No. 58206

SHEET NO.: C3.00

Tech: Jcat1 Plot Date: Mar 15,2017 10:23am Filename: L:\2014\14-0450\Engineering - Hourly\DWGs\Production Files\14-0450_RS.dwg

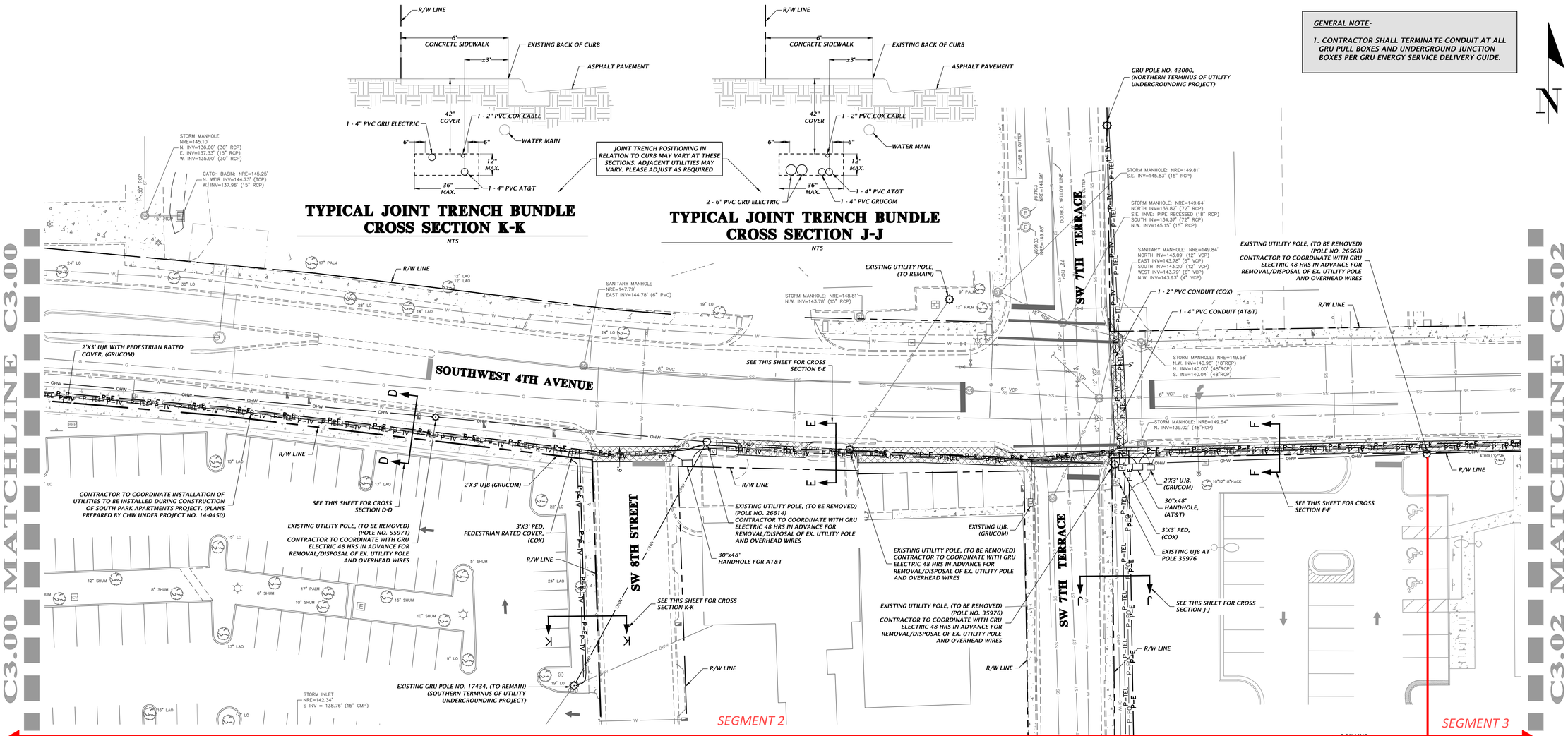

GENERAL NOTE-

1. CONTRACTOR SHALL TERMINATE CONDUIT AT ALL GRU PULL BOXES AND UNDERGROUND JUNCTION BOXES PER GRU ENERGY SERVICE DELIVERY GUIDE.

132 NW 76th Drive
Gainesville, FL 32607
(352) 331-1976, (352) 331-2476
www.chw-inc.com
est. 1988 FLORIDA CA-0075
CHW Professional Consultants

SCALE: 1"=20'

VERIFY SCALE BAR IS 1" INCH ON THIS DRAWING IF NOT ONE INCH ON THIS SHEET, ADJUST SCALES ACCORDINGLY.

CONSTRUCTION/BID REVISIONS:

SUBMITTALS:
11/08/16 – COG R/W PERMIT
03/15/17 – COG R/W PERMIT UPDATE

CLIENT: TRIMARK PROPERTIES

PROJECT: SW 4TH AVENUE OVERHEAD UTILITY UNDERGROUNDING PLAN

SHEET TITLE: CONDUIT PLANS

TECHNICIAN: J. THOMAS
DESIGNER: R. WALPOLE
QUALITY CONTROL: R. WALPOLE
PROJECT NUMBER: 14-0450

ROBERT J. WALPOLE

FL PE No. 58206

SHEET NO.: C3.01

Tech: JoinT Plot Date: Mar 15,2017 10:33am FileName: L:\2014\14-0450\Engineering - Hourly\DWGs\Production Files\14-0450_R0.dwg

CONTRACTOR TO OPEN, CUT, & REPAIR PAVEMENT AS NECESSARY FOR INSTALLATION OF UTILITIES. REFER TO FDOT INDEX NO. 307 AND C0.10 FOR DETAILS. RESTORE ALL STRIPING TO EXISTING OR BETTER CONDITIONS PER FDOT INDEX NO. 17346.

CONTRACTOR TO OPEN, CUT, & REPAIR SIDEWALK AS NECESSARY FOR INSTALLATION OF UTILITIES. REPAIR SIDEWALK/CURB RAMPS TO EXISTING OR BETTER CONDITIONS.

GENERAL NOTE-

1. CONTRACTOR SHALL TERMINATE CONDUIT AT ALL GRU PULL BOXES AND UNDERGROUND JUNCTION BOXES PER GRU ENERGY SERVICE DELIVERY GUIDE.

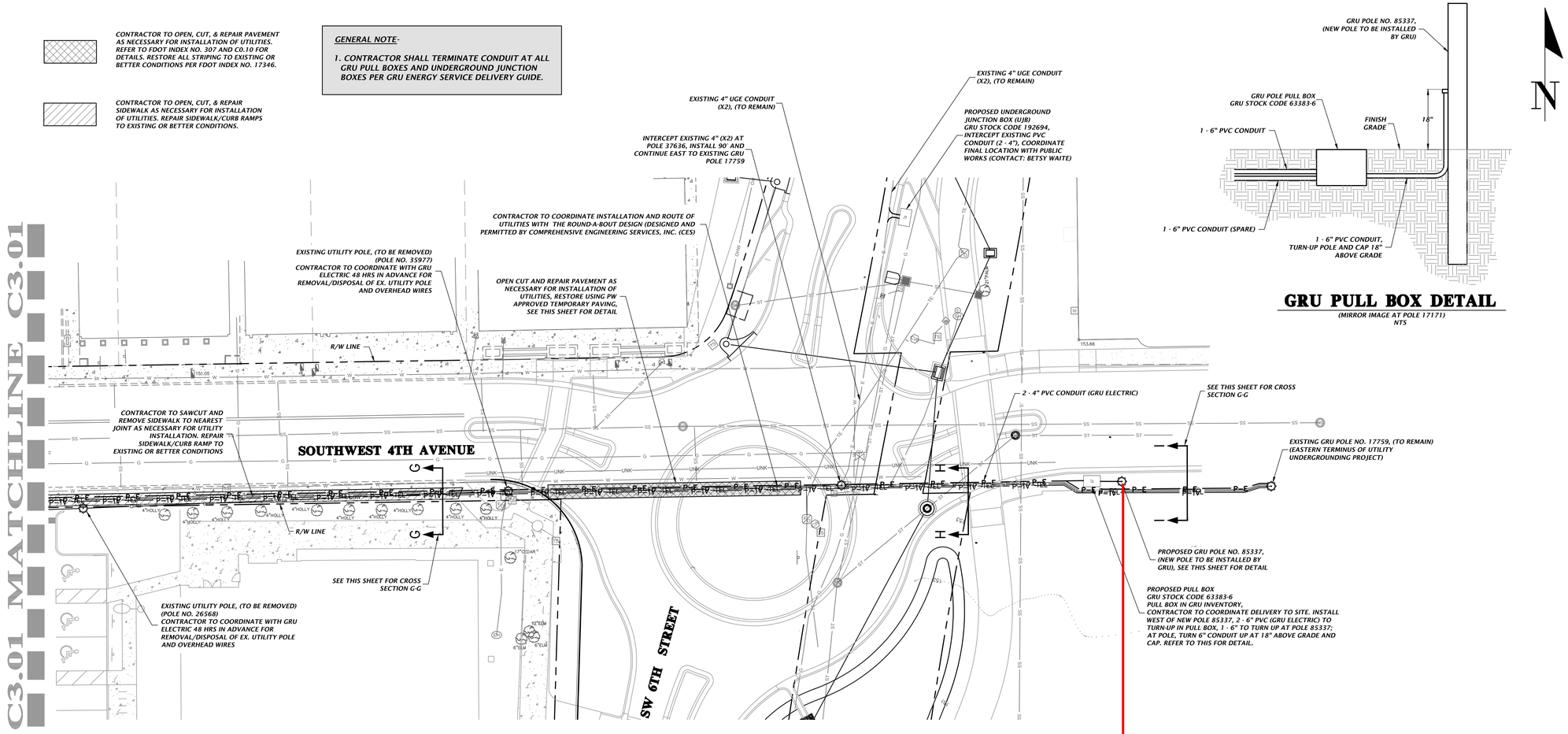

GRU PULL BOX DETAIL

(MIRROR IMAGE AT POLE 17171)
NTS

NOTES:

1. IN STAGE #1, CONSTRUCT COMPACTED FILL BENEATH THE HAUNCHES OF THE PIPE, USING MECHANICAL TAMPS SUITABLE FOR THIS PURPOSE. THIS COMPACTION APPLIES TO THE MATERIAL PLACED BENEATH THE HAUNCHES OF THE PIPE AND ABOVE ANY BEDDING.

2. IN STAGE #2, CONSTRUCT COMPACTED FILL ALONG THE SIDES OF THE PIPE AND UP TO THE BOTTOM OF THE BASE, WITH THE UPPER 12" RECEIVING TYPE B STABILIZATION. IN LIEU OF TYPE B STABILIZATION, THE CONTRACTOR MAY CONSTRUCT USING OPTIONAL BASE GROUP 3.

3. NEW 8" LIMEROCK BASE SHALL BE COMPACTED TO NOT LESS THAN 98% OF MAX DENSITY AS SPECIFIED BY THE FLORIDA DEPARTMENT OF TRANSPORTATION STANDARD SPECIFICATION 200-7.2. THE WIDTH OF THE LIMEROCK BASE SHALL BE THE WIDTH OF THE PIPE TRENCH PLUS 18" ON BOTH SIDES SEE DETAIL.

4. UNLESS OTHERWISE SPECIFIED, MATERIALS AND METHODS OF OPERATION REQUIRED TO INSTALL NEW AND REPLACEMENT PAVEMENT SHALL BE IN ACCORDANCE WITH THE LATEST APPLICABLE REQUIREMENTS OF THE FLORIDA DEPARTMENT OF TRANSPORTATION STANDARD SPECIFICATIONS FOR ROAD AND BRIDGE CONSTRUCTION.

5. PAVEMENT SHALL BE REMOVED TO NEATLY SAWED STRAIGHT EDGES.

6. THE TYPE AND THICKNESS OF THE NEW SURFACE MATERIAL SHALL BE CONSISTENT WITH THAT OF THE EXISTING SURFACE, BUT IN ALL CASES SHALL MEET THE MINIMUM STANDARDS ESTABLISHED BY THE PLANS AND SPECIFICATIONS.

7. THE BACKFILLING AND PAVEMENT REPLACEMENT MUST BE DONE IN ACCORDANCE WITH FDOT INDEX 307.

8. PAVEMENT CUTS SHALL HAVE THE ASPHALT SURFACE REPLACED WITHIN 24 HOURS, WITH OPEN CUT RESTORATION PERFORMED IN ACCORDANCE WITH MOST CURRENT EDITION OF FDOT INDEX NO. 307 USING THE FLWABLE FILL OPTION.

9. THE CITY OF GAINESVILLE PUBLIC WORKS DEPARTMENT SHALL BE NOTIFIED BY CALLING 352-334-5070 PRIOR TO START OF EXCAVATION.

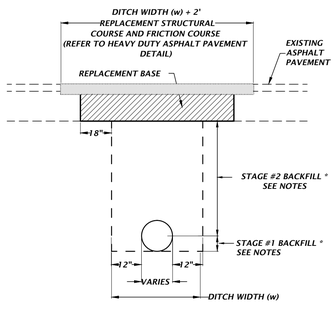

OPEN CUT AND REPAIR PAVEMENT DETAILS

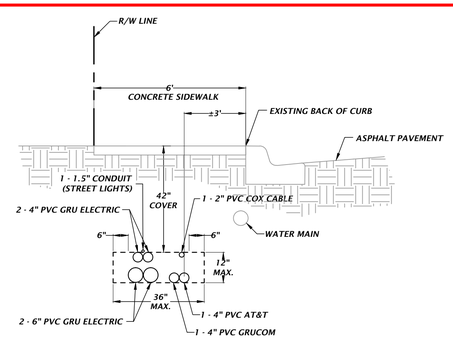

TYPICAL JOINT TRENCH BUNDLE CROSS SECTION G-G

NTS

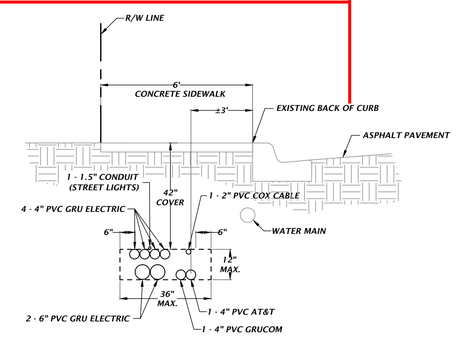

TYPICAL JOINT TRENCH BUNDLE CROSS SECTION H-H

NTS

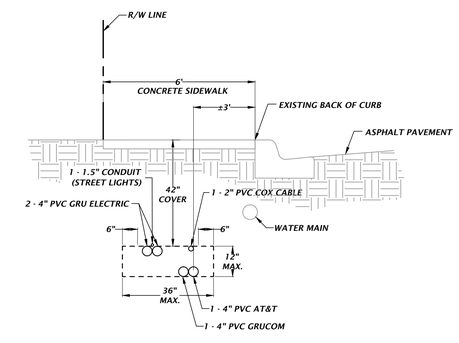

TYPICAL JOINT TRENCH BUNDLE CROSS SECTION I-I

NTS

JOINT TRENCH POSITIONING IN RELATION TO CURB MAY VARY AT THESE SECTIONS. ADJACENT UTILITIES MAY VARY. PLEASE ADJUST AS REQUIRED

132 NW 76th Drive
Gainesville, FL 32607
(352) 331-1976 (352) 331-2476
www.chw-inc.com
est. 1988 FLORIDA CA-0575
CHW Professional Consultants

SCALE: 1" = 20'
VERIFY SCALE BAR IS INCH ON THIS DRAWING
0 1"
IF NOT ONE INCH ON THIS SHEET, ADJUST SCALES ACCORDINGLY.

CONSTRUCTION/BID REVISIONS:

SUBMITTALS:
11/08/16 – COG R/W PERMIT
03/10/17 – COG R/W PERMIT UPDATE

CLIENT: TRIMARK PROPERTIES
PROJECT: SW 4TH AVENUE OVERHEAD UTILITY UNDERGROUNDING PLAN
SHEET TITLE: CONDUIT PLANS

TECHNICIAN: J. THOMAS
DESIGNER: R. WALPOLE
PROJECT CONTROL: R. WALPOLE
PROJECT NUMBER: 14-0450

ROBERT J. WALPOLE
FL PE No. 58206

SHEET NO.: C3.02

Tech: JaniT Plot Date: Mar 15,2017 10:23am Filename: L:\2014\14-0450\Engineering - Hourly\DWGs\Production Files\14-0450_WE.dwg