#210009D

Clever Devices
Where Mobility Matters

PROPOSAL TO GAINESVILLE REGIONAL TRANSIT SYSTEM (RTS) FOR RFP #RTSX-210030-DS DIGITAL SIGNAGE AND CONTENT MANAGEMENT SOFTWARE

UNREDACTED CONFIDENTIAL

APRIL 29, 2021

300 Crossways Park Drive
Woodbury, New York 11797

516-433-6100

www.cleverdevices.com

Clever Devices

April 29, 2021

Daphyne Sesco
Procurement Specialist III
City of Gainesville
200 E. University Avenue, Room 339
Gainesville, FL 32601

RE: RFP #RTSX-210030-DS Digital Signage and Content Management Software

Dear Ms. Sesco,

Clever Devices is excited to propose our best-value, state-of-the-art solution to RTS for Digital Signage and Content Management Software. With our robust integration capabilities and world-class Intelligent Transportation System (ITS) solutions, we are experienced and qualified to help you achieve your goals in this solicitation. The purchase and installation of our proposed Digital Signage solution fits in with your current ITS deployment, saving RTS the time and resources of managing an additional team and/or project.

As a member of the Clever Devices family, we hope you will find our best-in-class technology and competitively priced offer a reflection of our desire to continue our partnership. Our signage solution will offer the RTS ridership an enhanced experience at Rosa Parks and Butler Plaza transfer centers, with modern Samsung screens that will display the pertinent information that RTS desires. With high-quality Samsung signs and our state-of-the-art BusTime real-time information functionality, we are the best partner to ensure that you receive maximum return on your investment.

It is worth mentioning that choosing Clever Devices for this project opens the realm of possibility for additional wayside signs as well as onboard infotainment, should RTS decide to go that direction in the future. Our content management software provides unparalleled ease of use as it manages all Clever Devices provided signs and onboard infotainment signage through a single software platform. Furthermore, we are [redacted] with the requirements of your RFP.

We thank you for this opportunity to continue to earn your business, and we look forward to becoming a long-term trusted partner of RTS. We confirm that our proposal is valid for 120 days, and we acknowledge receipt of Addenda 1-2. Your primary point of contact is Johnna McQuinn, Strategic Account Manager. She can be reached by phone at (516) 736-0620 or by email at JMcQuinn@CleverDevices.com. As RTS continues to modernize operations and forge its way into the future of public transportation, we look forward to being by your side.

Sincerely,

Francis J. Ingrassia
President
Clever Devices Ltd.

Clever Devices

A. TABLE OF CONTENTS

A. TABLE OF CONTENTS 3
B. TECHNICAL PROPOSAL 4
B.1 SCOPE OF WORK 4
B.1.1 EXTENSION TO CURRENT CLEVERCAD UPGRADE PROJECT 4
B.1.2 COMPLIANCE WITH THE RFP REQUIREMENTS 5
B.1.3 CLEVER DEVICES VMS SIGNS 5
B.2 PROJECT APPROACH 16
B.2.1 INTEGRATED MANAGEMENT: YOUR CROSS-FUNCTIONAL PROJECT TEAM 16
B.2.2 PROJECT SCHEDULE 23
B.2.3 PROJECT APPROACH 24
C. PRICE PROPOSAL 31
D. QUALIFICATIONS 32
D.1 KNOWLEDGE AND PAST PROJECT EXPERIENCE 32
D.2 CAPABILITIES AND DEDICATION TO CONTINUED INVESTMENT 33
D.3 ORGANIZATIONAL STRUCTURE 34
D.4 LOCATION OF OFFICES AND NUMBER OF EMPLOYEES 35
D.5 FINANCIAL STRENGTH, STABILITY, AND CAPACITY 35
D.6 REFERENCES 37
E. APPENDIX 1: REQUIRED FORMS AND CERTIFICATIONS 41
F. APPENDIX 2: SAMPLE END-USER LICENSE AGREEMENT (EULA) 42

B. TECHNICAL PROPOSAL

B.1 SCOPE OF WORK

Clever Devices understands that it is the intent of RTS to procure commercial building digital display technology application with installation, support, and warranty. RTS intends to acquire complete Digital Signage/Content Management Software (CMS) technology for its two bus transfer stations. Clever Devices is proposing a complete solution for the design, installation, testing, and acceptance of the requested Transit Center Digital Signage. Our solution is all-inclusive and represents complete installation at both of RTS' transfer stations. Clever Devices understands that we are responsible for all parts, labor, and all other associated apparatus necessary to completely install, test, and turnover for acceptance of the Digital Signage/CMS Solution to RTS.

B.1.1 EXTENSION TO CURRENT CLEVERCAD UPGRADE PROJECT

This section contains confidential/proprietary information.

If Clever Devices is awarded this sign project, we intend to implement it as an extension of our ongoing CleverCAD upgrade project with RTS. The CleverCAD Project includes our BusTime Real-Time Passenger Information system. BusTime supports interfacing to LED and LCD signs located at stops, bays, terminals, transfer centers, or any other location desired by RTS now or in the future. BusTime provides a standard interface for the management and control of wayside signs through Clever Devices' Talking Sign Controller (TSC). This electronic component provides a standard interface to BusTime over Ethernet (cellular or wireless LAN as options) and supports audio playback to support ADA.

When integrated to BusTime, the sign displays real-time passenger information of the vehicles for each route that services the associated stop/bay. BusTime presents the following information for each vehicle:

- Current time and temperature (if configured by the Console user)
- Route
- Destination
- Predictions
- Service bulletins on a separate row/area of the sign

Furthermore, the central sign health and content management software solutions are not very server resource intensive. They will be added to existing hosted resources available and/or currently being deployed for the CleverCAD system upgrade.

Clever Devices

B.1.2 Compliance with the RFP Requirements

This section contains confidential/proprietary information.

[redacted]

B.1.3 Clever Devices VMS Signs

Variable Message Signs (VMS) provide an opportunity to communicate effectively with the riding public at stops, shelters, stations, transit centers, transfer locations, or any location desired by RTS. Clever Devices supports many different signs including LCD, LED, and E-Paper. To meet your specific requirements, we have proposed LCD signage for RTS. BusTime manages the VMS signs, provides access to bus arrival information (route, description, estimated time of arrival), provides alerts and bulletins, and supports multiple VMS sign types at different locations throughout the transit service area.

Clever Devices has included the following VMS signs for RTS:

VMS Sign Type	Description
Butler Plaza Wall Mount LCD Signs (2x)	Samsung Smart Signage OHF series 55" Outdoor LCD with Integrated PC, wall mount, cellular modem and content player
Rosa Parks Free Standing LCD Kiosk Signs (1x Double Sided)	Dual sided Samsung Smart Signage OHF series 55" Outdoor LCD with Integrated PC, free standing kiosk mount, Cellular Modem and content player

Samsung's OHF Series SMART Signage delivers an all-inclusive engagement solution that is completely equipped for virtually any outdoor environment. Featuring a slim depth (85 mm.) design, along with the added convenience of an embedded power box, the OHF Series displays ensure durability, flexibility, and 24/7 performance, with IP56-certified durability to ensure performance even in extreme temperatures. Furthermore, with 2,500 nit brightness, a 5,000:1 contrast ratio, and anti-reflection glass, RTS can ensure their messages are showcased almost anytime or anywhere.

B.1.3.1 Talking Sign Controller

Clever Devices' VMS signs utilize a talking sign controller which is an embedded computer that provides the link between the VMS sign and BusTime. It receives commands and text from BusTime to display through a standard interface. It will carry out the command which can be to report the status of the vehicle or to display the following text on the VMS sign. The talking sign controller includes the following:

- Data communications interface to BusTime through Ethernet, WLAN, or cellular
- Passenger information functionality and control of what to display on the VMS sign
- Audible announcement functionality with interface to a speaker and external pushbutton

Clever Devices

[redacted]

The talking sign controller is small and will be embedded within the VMS sign.

B.1.3.1.1 DATA COMMUNICATIONS

Each talking sign controller comes with Ethernet and will be outfitted with a WLAN and/or cellular modem to support data communications with BusTime. Clever Devices configures the VMS signs to meet RTS' IT guidelines and desired communications technology. Each VMS sign will have a unique ID in the form a static IP address.

A primary purpose of the talking sign controller is to standardize the interface to BusTime. The talking sign controller utilizes a BusTime-standard protocol and the National Transportation Communications for ITS Protocol (NTCIP) for compatible VMS signs. Clever Devices will incorporate additional standards upon need.

B.1.3.1.2 PASSENGER INFORMATION FUNCTIONALITY

The purpose of VMS signs is to communicate important information to the public who are waiting to board a vehicle. VMS signs display bus arrival information, alerts, bulletins, time, weather and other important information. BusTime provides the information to display on the VMS sign and allows RTS to select the VMS sign layout. The talking sign controller is responsible for receiving, processing, formatting and controlling the display of the information as defined by the VMS sign layout. The layout defines the text format and display characteristics.

The talking sign controller is intelligent and displays bus arrival information when available. When there is a loss of communication to BusTime, the talking sign controller autonomously counts down the ETA for a configurable amount of time and then displays an RTS-defined message such as "System not Available". In this scenario, BusTime can be set up to alert authorized personnel through email when a VMS sign detects a fault, so maintenance is prompt and efficient.

Upon recovering from a power failure or a loss of communication, the VMS sign immediately reestablishes communication to BusTime and displays updated messages within 30 - 90 seconds.

BusTime is configurable to display schedule information for open blocks (operator not logged in).

Even though the talking sign controller periodically receives date and time information from BusTime, it independently maintains accurate time for a minimum of 14 days without an external power source.

B.1.3.1.3 AUDIO ANNOUNCEMENTS

Included with our sign solution for RTS is a pushbutton switch that allows users to activate an audible announcement of what next arrival information the VMS sign is currently displaying. The pushbutton requires a force of approximately 22 newtons to trigger the announcement which is paramount to eliminate spurious triggers due to vibration. The pushbutton is rugged, mounts separately and in proximity to the VMS sign, and interfaces with the talking sign controller. The talking sign controller uses a state-of-the-art text-to-speech technology that supports multiple languages with realistic voice quality. With 17 languages and 60 unique voices, RTS can configure the system to audibly announce in multiple languages sequentially, or in a single language. The audio level is configurable and automatically adjusts the audio playback level to compensate for ambient noise.

The pushbutton will be conveniently located and easy to use. To meet accessibility guidelines, Clever Devices will mount the pushbutton within 15 to 48 inches from the finished floor of the station, as well as in a suitable location to ensure there is enough space for a person in a wheelchair to reach it. Optionally, to assist the visually impaired in locating the pushbutton, the VMS sign can also be fitted to emit a brief low volume chirp every few seconds.

B.1.3.2 DISPLAY LAYOUT

BusTime uses layouts to define what information is displayed and how it is displayed on the VMS sign. Layouts are unique to each VMS sign type and can include the following:

- Character size
- Number of characters per line
- Format of bus arrival information
- Temperature and format
- Paging
- Number of lines
- Grouping by route or by time
- Time and format
- Where and how to display alerts and bulletins
- Text hold time and blanking interval

As shown above, there are many features of the layout. Each VMS sign type may support all or a subset of the features. Many VMS signs support different character sizes, and those with multiple lines are configurable to display arrival information by time or by route. Messages can display in multiple sequential “pages” to vary the display such as showing a bus arrival message and a date/time message on a single line as one message or using an alternating sequence of two one-line message “pages.” The hold time for each message and the blanking interval between messages is variable down to 100 msec increments.

LCD VMS signs support even more layout capability including movies, pictures, RSS feeds, scrolling text, and more through the use of a Content Manager and Content Player. The Content Manager is a fixed-end application that allows the user to compose, assemble, and configure all visual and audio content for the LCD VMS sign to deliver to your ridership. The Content Player is software running on the LCD VMS sign computer that formats the display according to the predefined configuration from the Content Manager. It interfaces to BusTime for bus arrival information through the talking sign controller.

LCD VMS signs display similar information as the BusTime website; a bus arrival grid of predictions for the associated routes and stop and service messages regarding delays, outages, and service alerts can scroll on

the display as well as, pictures, movies, and more. The LCD VMS signs are branded to include RTS' logo and background color.

LCD VMS signs support advertising through images, video and audio. Advertising reporting is possible as the Content Player can tag any piece of content and log the associated ad campaign to report the play activity that is necessary for ad revenue chargeback.

Clever Devices' solution includes the use of The Content Manager software provided to an RTS-authorized user. This software allows for adding content, developing playlists, scheduling content, as well as deploying and logging the content play on the LCD VMS sign. Alternatively, Clever Devices can manage and support this application remotely.

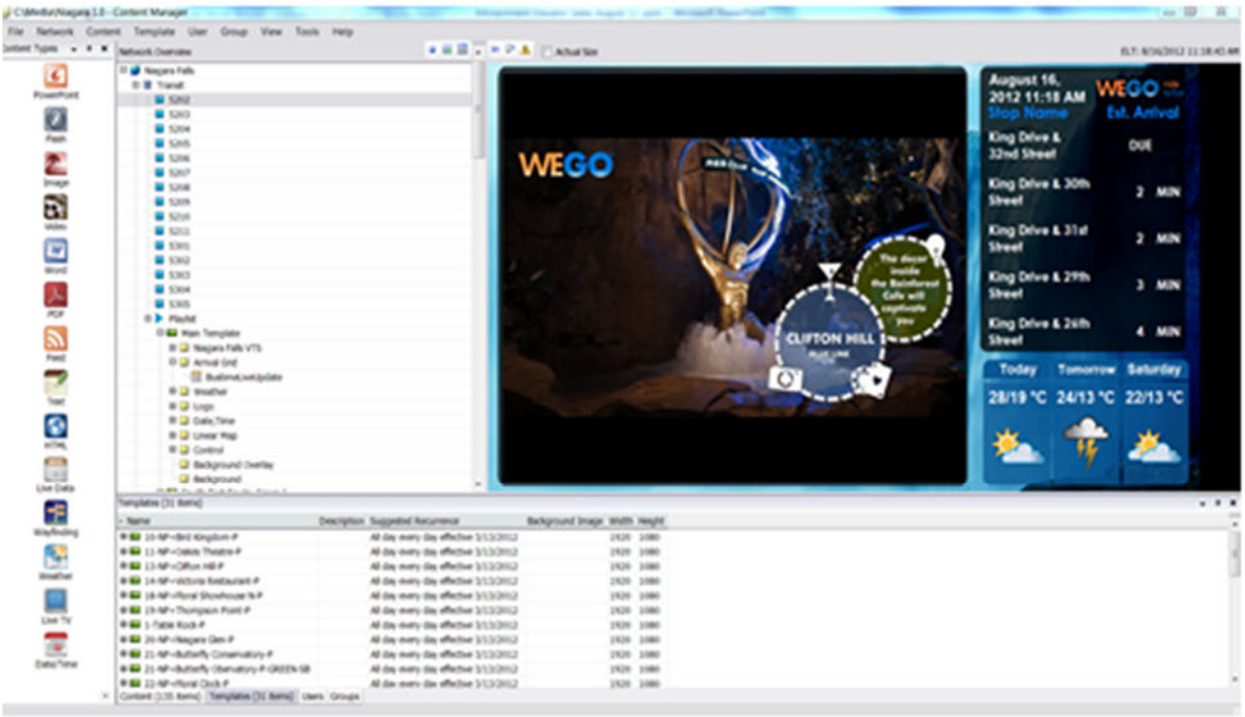

FIGURE 1: CONTENT MANAGER

B.1.3.3 LARGE LCD VMS SIGNS

Clever Devices offers a several sizes of large diagonal LCD VMS sign with full color and audio. We have both interior and exterior models. Exterior LCD VMS signs include a vandal-resistant NEMA-4X enclosure that is durable in extreme environmental conditions. For RTS we have proposed a 55-inch sign for Butler Plaza and a dual-sided 55-inch free standing Sign for Rosa Parks.

As stated, for RTS we have proposed the Samsung Smart Signage OHF series displays. The OHF Series displays feature a thinly-designed, all-in-one composition. A thorough package equips the displays for long-term performance, and includes ingress protection, anti-reflection technology, vandalism defense and a highly-efficient cooling system, among others. In addition, an integrated power box condenses operational components and accommodates an ultra-slim (85 mm.) frame.

Tempered, IK10-certified Magic Glass (5 mm.) provides the OHF Series displays with durable advanced protection against a range of external and environmental factors. Should the protective glass break, a

strategically placed gap between the Magic Glass and LCD panel prevents significant damage and enables efficient repair. The IK European strength test rating uses a 0-10 scale (where 10 indicates the highest possible protection) to measure the degree of resistance against external impact.

The following diagram shows an example layout of one of our signs showing Transit information.

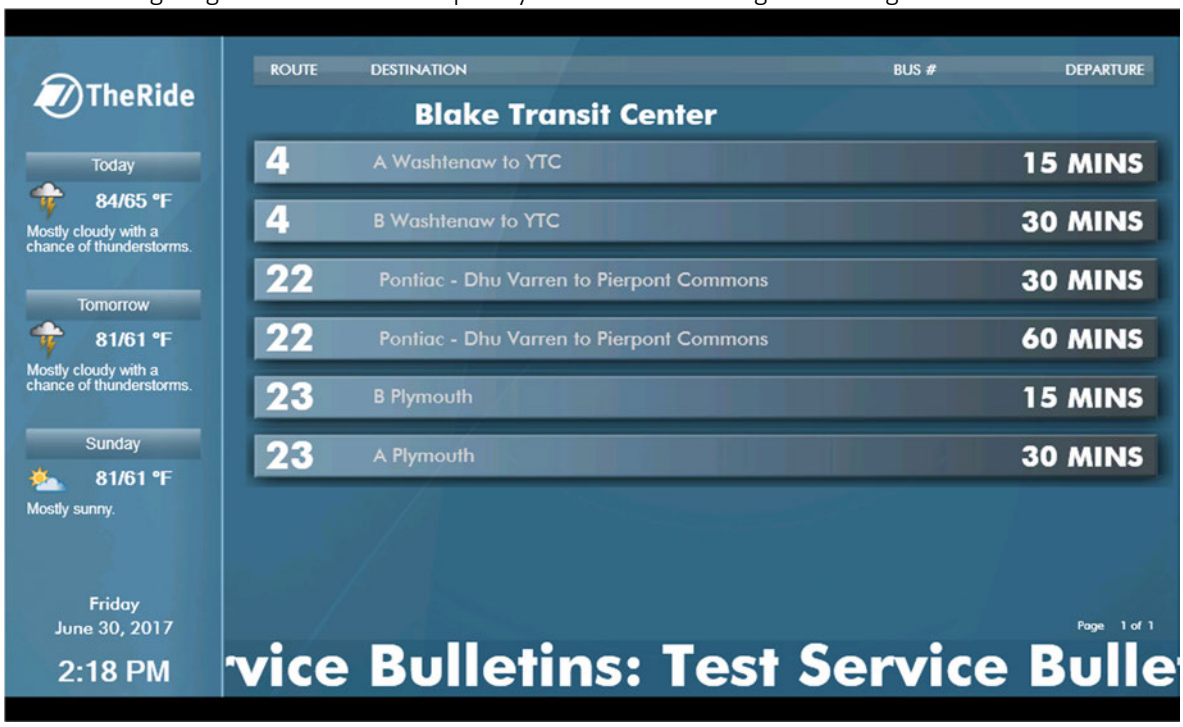

Excellent and Captivating High Visibility - The OHF Series displays feature innovative Magic Glass, TUV-certified image quality and an Auto Brightness sensor to improve picture quality and optimize message delivery for any viewer. When combined, these features produce high 2,500nit brightness and a 5,000:1 contrast ratio that amplifies any type of content. These powerful displays also include circular polarizing technology that eliminates display blindness caused by polarized sunglasses.

Reflection Prevention - Beyond its basic picture enhancement functionality, the OHF Series' Magic Glass minimizes reflection and enables rich, clear image presentation even when exposed to direct sunlight. Along with their high brightness and contrast ratio, the OHF Series displays' reflectivity ensures continuous visibility and content integrity in any outdoor setting.

For the Butler Plaza signs, we have included a standard wall mount to hang the signs:

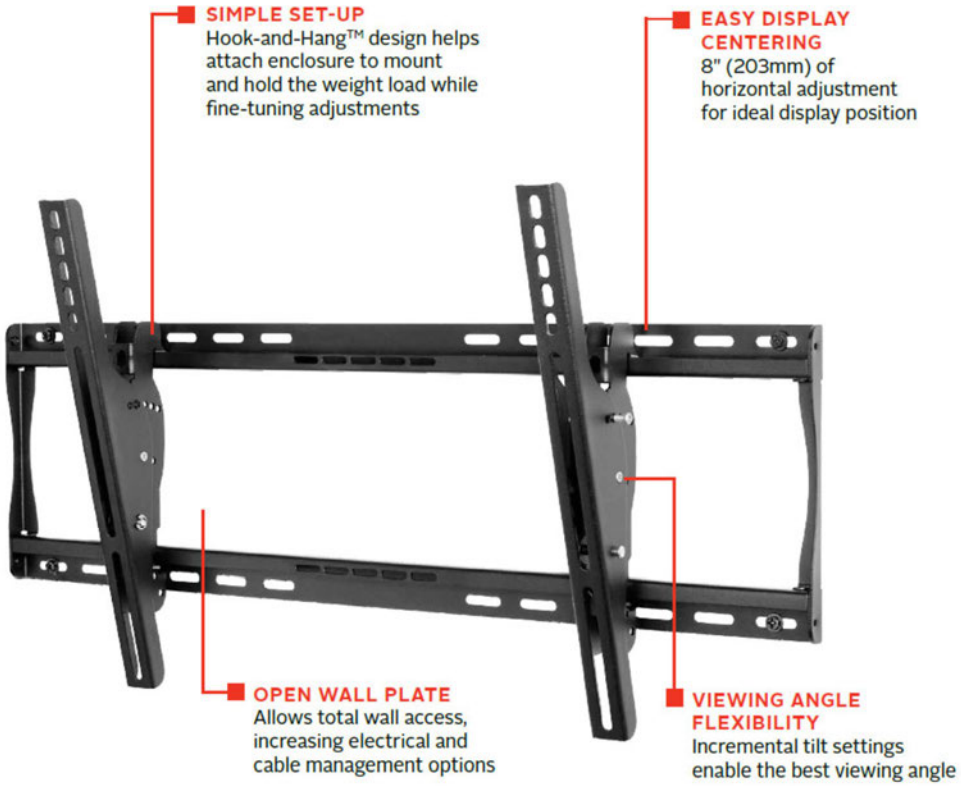

For the free-standing mount at Rosa Parks, we have included the Samsung Jayhawk stand as shown below.

Clever Devices

DIMENSIONS

55" JAYHAWK

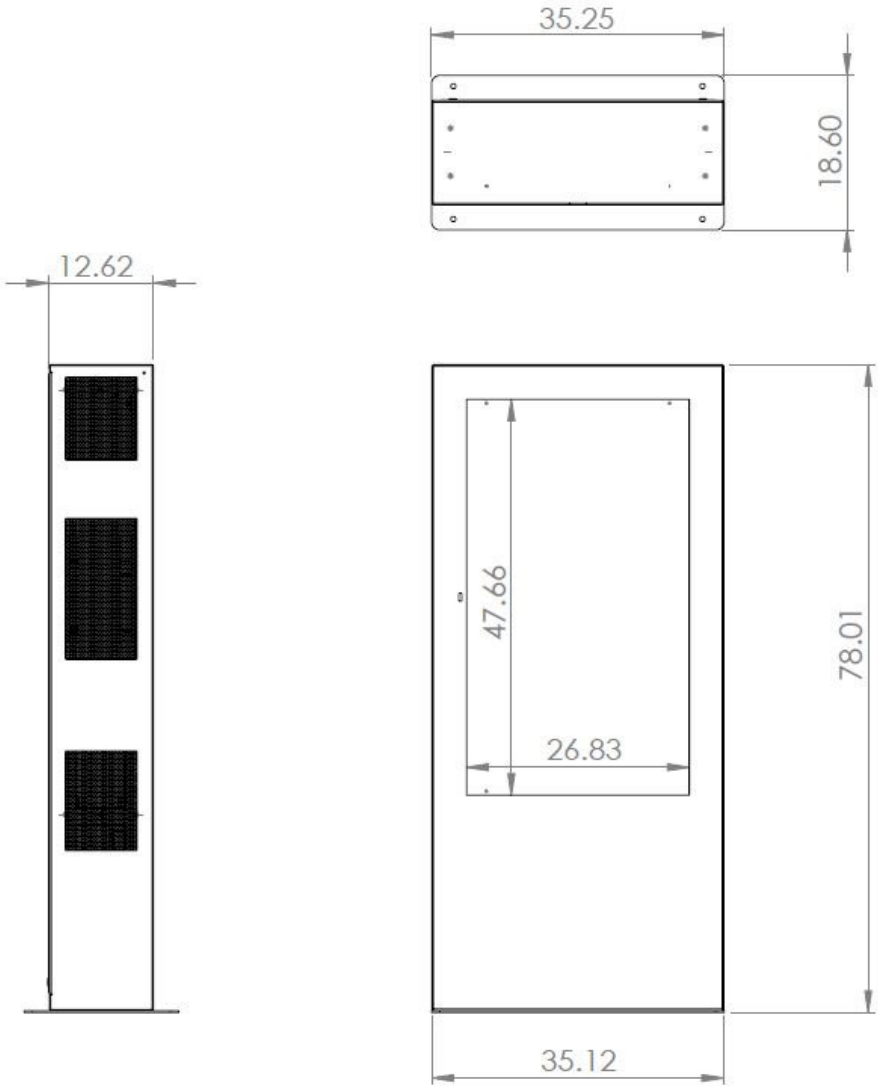

B.1.3.4 SERVICEABILITY

Clever Devices' VMS signs are easy to service, should maintenance become necessary. The display housing is secure, yet convenient, with front service access for all modular assemblies, components, wiring, and other materials. Access involves unlocking the vandal resistant locking mechanism and opening the VMS sign. The display module and all internal components are removable and replaceable by a single technician with basic hand tools.

Maintenance personnel can use a computer with diagnostic software to communicate with the sign's controller through a serial connection port, or they can access the VMS sign remotely to perform firmware upgrades.

Field maintenance personnel require immediate feedback that the VMS sign is working properly after servicing. Upon power up, the talking sign controller provides immediate feedback to the maintenance personnel that includes the following:

- Display the firmware version number
- Display the communication port configuration information
- Display the health of the sign
- Display the time and date synchronized to RTS' local time

Please see section B.2.3.6 for more details on our service solution for RTS.

B.1.3.5 INSTALLATION

RTS will have final say to identify the installation location of the signs at the 2 Transit Centers. Clever Devices will work with RTS to determine the best mounting solution at each installation location. Clever Devices utilizes local contractors that will be trained, licensed in the state, and will also be approved by RTS. Our chosen contractors will comply with local codes and standards and will provide safety barriers for patron protection. Clever Devices has assumed the following for sign installation location.

Rosa Parks:

We will install a single double-sided sign at Location #1 in the following graphic provided by RTS with the RFP:

Clever Devices

Butler Plaza:

We will install two single sided signs on both sides of the ticket building at either optional location in the following graphic provided by RTS with the RFP. Final location will be decided during the design review process.

Each LCD location noted will include (1) Speaker enclosure to announce audio to meet ADA guidelines. The enclosure must be mounted under each sign or in an approved location. The button will be mounted at 46” from ground surface to the centerline of the button.

Clever Devices

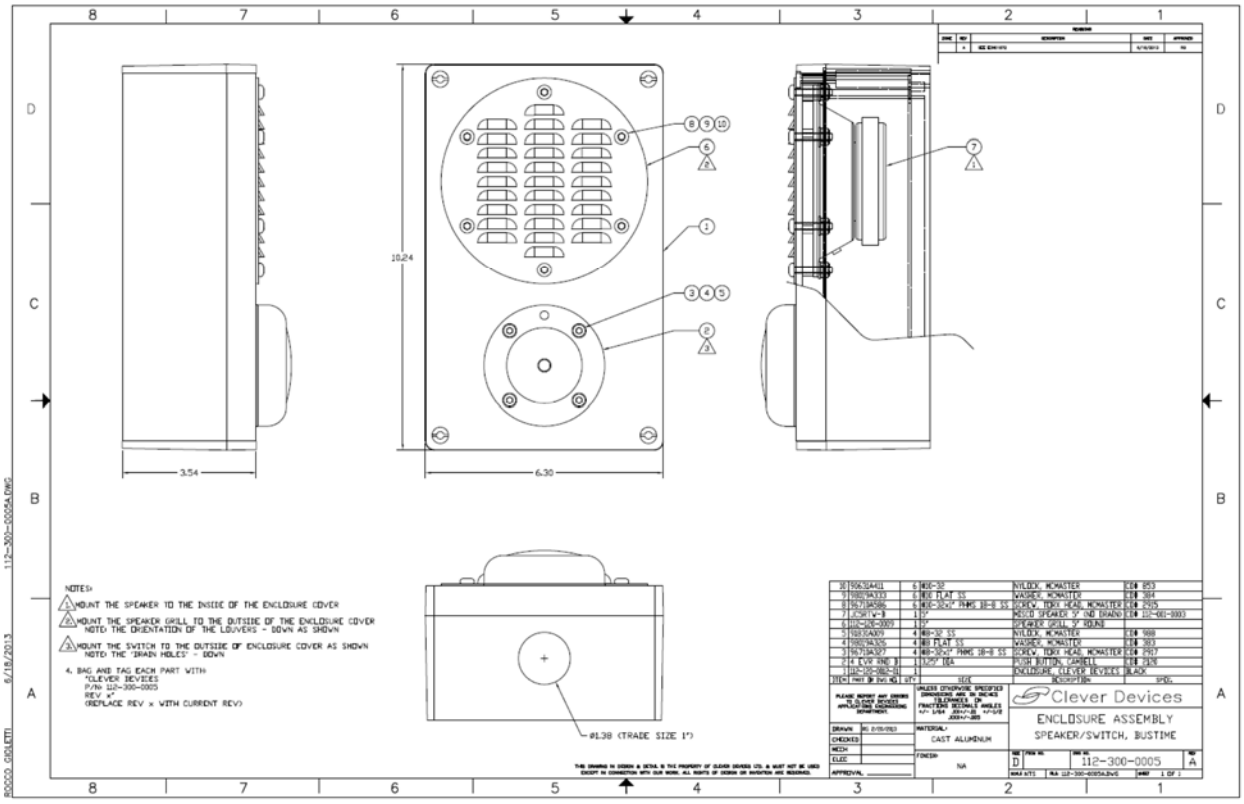

The speaker/button will also include a Brail sign directly above the button. The following picture is an example of the speaker/button/brail sign installation.

Clever Devices

B.2 PROJECT APPROACH

In this section you will learn about the key project and deployment aspects of the solution that Clever Devices is proposing for RTS. We are confident that you will take away the following key points after reading this section:

- Confidence in Clever Devices' staff and in our ability to deliver
- How we plan to manage your project, minimize disruption, and mitigate inherent project risks
- How we will keep your staff informed, engaged, and exceed your expectations

Clever Devices' goal for this deployment is quite simple and created with RTS, our client, in mind. Our goal is to complete your Digital Signage and Content Management Software project as efficiently and as seamlessly as possible.

On the following pages we detail the critical aspects of our Project Management Plan, which will inevitably result in the success of your project.

B.2.1 INTEGRATED MANAGEMENT: YOUR CROSS-FUNCTIONAL PROJECT TEAM

One of the most important aspects of a project is the team of professionals assigned to ensure its success. Our project teams are customized for each transit agency and project Clever Devices works on so that we can bring together the most specialized and skilled team that we can offer.

For this project with RTS, we propose that the same project team (Ellen Mullen and Alex Kuman) currently deploying our ITS solution for RTS take on this additional scope. Ellen and Alex are already familiar with RTS' operations, requirements, and team. In addition, they can coordinate this deployment in synchronization with the larger ITS deployment to make sure that the signs are getting accurate, reliable information from the Real-Time Passenger Information System.

B.2.1.1 CORE PROJECT TEAM MEMBERS

Clever Devices' dedicated project team is comprised of Project Manager Ellen Mullen, Project Engineer Alexander Kuman, and Engineering Project Manager and VMS expert Travis Nolan. These are Clever Devices' expert employees with the capacity and experience to perform this project with minimal disruption to ongoing RTS' daily operations. Ms. Mullen, Mr. Kuman, and Mr. Nolan are optimally suited for RTS' project with transit experience as well as a history of success at Clever Devices. The following section describe our core project team members. Resumes for proposed key personnel can be found in section B.2.1.4 of our proposal.

PROJECT TEAM	
	Ellen Mullen, Project Manager • Main point of contact between RTS and Clever Devices • Responsible for achievement of project objectives and coordination from project kickoff to system acceptance • Handles daily operations of system deployment • Primary interface between client, Clever Devices' project team members, contributory team members, and subcontractors; manages subcontractor activities • Responsible for project planning, schedule and milestone achievement

Clever Devices

	Alexander Kuman, Project Engineer • Works with the systems engineer on overall design • Oversees implementation and deployment phases • Responsible for adherence to contract requirements, requirements matrix traceability and validation • Supports requirements and design reviews; creates acceptance test procedures
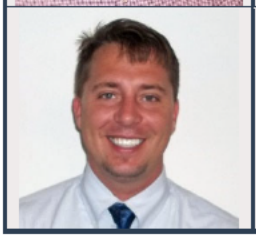	*Travis Nolan, Engineering Project Manager (Resident VMS Expert)* • 19 years of professional experience and experience with over 75 implementations at major mass transit organizations • Clever Devices' resident VMS expert and design specialist for all Wayside Signs • Creates designs and deployments for customer facing hardware

B.2.1.2 Contributory Team Members

Projects awarded to Clever Devices become the responsibility of the entire organization; we are directly responsible for each other's success. The following staff members and their teams will indirectly support the RTS project.

Johnna McQuinn, Strategic Account Manager

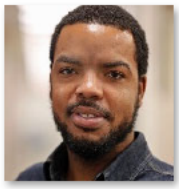

Patrick Benjamin, Strategic Product Operations Director

Kelly Borndale, Director, IT Implementation

Elvis Santana, Director, Service

Jonathan Arena, Director, Data Systems

Lou Peragine, Supervisor, Applications Engineering

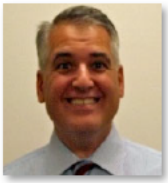

Michael Pietromonaco, Director, Training and ProServices

Lisa Stewart, Director, Production and Customer Service

Douglas Evans, Installation Manager

B.2.1.3 SUBCONTRACTORS

As the prime contractor and system integrator, Clever Devices is responsible for the management of all subcontractors and suppliers. We will provide all contractual and project related activities with our subcontractors and suppliers including the coordination of meetings, documentation development, project deliverables, invoices, payments and more. Our project team is directly responsible for this effort and will coordinate via in-person meetings, regular teleconferences, and email as appropriate. Our supply chain management from the Woodbury, NY office also supports our project team. Clever Devices will be the single point of contact for RTS to address all questions and issues related to the project. However, as required to expedite resolution of issues, Clever Devices may elect to invite subcontractors or suppliers to meetings with RTS.

B.2.1.3.1 W.W. GAY FIRE & INTEGRATED SYSTEMS – A DIVISION OF SCIENS BUILDING SOLUTIONS

W.W. Gay was established in 1972 and has been led by Nandu Paryani since 1988. They have served the North Florida market for decades – serving businesses and protecting lives. They have been part of Sciens Building Solutions for over a year now. Sciens is a trusted provider for fire detection, fire protection, security, communication, and electrical needs – locally, regionally, and nationally.

Nandu has remained the day-to-day operational President of the business in North Florida and we look forward to collaborating with them on this project.

B.2.1.4 ORGANIZATIONAL CHART AND RESUMES

On the following page, Clever Devices has provided an organizational chart indicating key project personnel, support personnel, and subcontractors for the RTS project. Following the organizational chart, Clever Devices has provided detailed resumes for the proposed project team, as a refresher of their qualifications.

Clever Devices

Project Organization for RTS

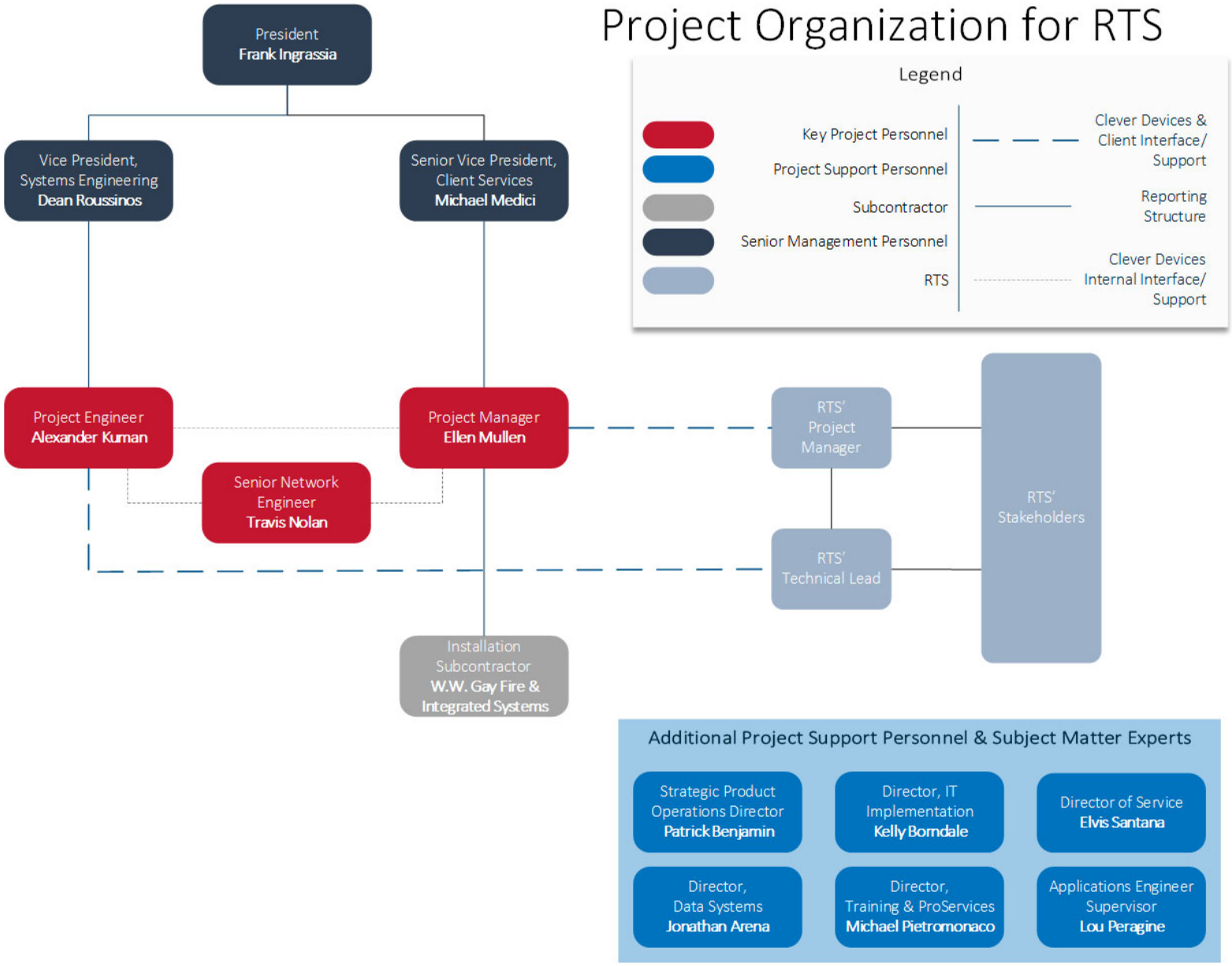

#210009D

Clever Devices

Ellen Mullen

SENIOR PROJECT MANAGER

Education:

- MBA, Information Systems, St. John's University
- BA, Mathematics & Sociology, University at Albany

Specialization:

- PMP Certification
- Project Management
- Project Planning
- Project Deployment

Years of Experience:

- 23 years

Employment History:

- Project Manager, Clever Devices Ltd., 2012 to Present
- Technical Support Specialist, Comps Inc., 2006-2012
- Various Roles of increasing responsibility, SBS International Subsidiary of Boeing, 1995 – 2005
  - Project Manager, 4 yrs
  - Product Manager, 3 yrs
  - Technical Support, 3 yrs

Ellen Mullen is a goal-focused, results driven professional with extensive experience in the transportation industry, and is PMP Certified. She is adept at working on projects of all sizes and phases, and has deployed ITS solutions, as well as scheduling systems, across a variety of transportation service types. She has a proven ability to understand customer requirements and liaise with planners to successfully bridge business and technical solutions. Ellen provides strong analytical and communication skills in solving software and technical related items. She has worked on projects all over the United States and has also led pilot projects in South America.

SENIOR PROJECT MANAGER, CLEVER DEVICES LTD., *WOODBURY, NEW YORK*

- Clever Devices' project manager is the primary interface to the transit agency. Clever Devices' project team members, subject matter experts and subcontractors work directly with, and report to, the project manager.
- As project manager, Ms. Mullen is your key point of contact with the following primary responsibilities:
  - Handle all of the daily operations of your scheduling system deployment
  - The primary planner and manager of Clever Devices' project team and coordinator of all project activity.
  - Keeping the project moving forward and the team focused on the delivery of all project milestones
- Additional expertise includes:
  - Implementing multi-agency projects
  - Installing software applications and scheduling software
  - Deploying and testing full ITS solutions including RTPI, CAD/AVL, AVA, and wayside signs
  - Multi-phase projects, fleet expansion, and integrating to existing functionality
  - Software Upgrades and Technical Support

TECHNICAL SUPPORT SPECIALIST, COMPS INC., *GLEN COVE, NEW YORK*

- Provided systems support for customers to maintain database functionality
- Assisted customers with troubleshooting and installation of software
- Proactively tracked and reported trends with software issues

PROJECT MANAGER, SBS INTERNATIONAL SUBSIDIARY OF BOEING., *NEW YORK, NEW YORK*

- Deployed airline scheduling systems to major airline carriers
- Managed and coordinated the daily operations of the systems deployment
- Implemented state-of-the-art comprehensive scheduling software
- Responsible for user training on software functionality
- Supervised a team of fifteen engineers and programmers

Key Projects:

- Greater Portland Council of Governments
- Santa Barbara Metropolitan Transit
- Central NY Regional Transportation
- Greater Dayton Regional Transit Authority (GDRTA)
- Gainesville Regional Transit System
- Knoxville Area Transit
- Loudoun County
- John F. Kennedy International Airport
- LaGuardia Airport
- City of Niagara Falls Transit
- ST. Catharines Transit Commission
- SBC Trans, Sao Paolo, Brazil

Clever Devices' Products:

- CAD/AVL
- Mobile Applications
- BusTime
- BusLink
- CleverReports
- AVA
- AVM
- CleverVision
- LCD Signs
- LED Signs
- RideCheck Plus
- SmartYard
- WLAN

Integration Experience:

- GH7 paratransit
- Scheduling system integration
- InfoDev APC Sensors
- Transit Master APC Sensors
- Motorola Radios
- GFI Fareboxes
- Sched21 Scheduling System
- Trapeze Scheduling System
- Luminator Signs
- TwinVision Signs
- Apollo Onboard Surveillance
- Router Integration

#210009D

Clever Devices

Alexander Kuman

PROJECT ENGINEER II

Education:

- BS, Electrical Engineering
- Minor Economics
  Rensselaer Polytechnic Institute

Specialization:

- Control Systems, Signal Processing
- Project Management
- Six Sigma Yellow Belt
- Hardware/Software Integration

Years of Experience:

- 10 years

Employment History:

- Clever Devices Ltd.
  - Project Engineer II 2020-Present
  - Project Engineer I 2018-2020
- UL LLC
  - Project Engineer 2014-2018
  - Associate Project Engineer 2012-2014
- Clever Devices LLC
  - Electrical Engineer 2010-2012

Alex has 10 years of experience managing and handling complex projects from the ground up. He has worked on a variety of product types and structures. From low voltage PCB-level circuitry to Switched Phase Line Voltage; and including network operability for wireless, wired, near field and optical technologies. Alex has helped customers design, scope and plan their product lines for the future. He is a technical based engineer with strong analytical skills, that will ensure the product will specifically meet your needs. Currently a Six Sigma Yellow Belt and Green Belt in training, he will ensure the deployment process is as efficient as possible.

PROJECT ENGINEER II/I – CLEVER DEVICES LTD., WOODBURY, NY

- Support or lead Clever Devices' product deployment including design documentation, test plans, acceptance testing, integration, and configuration.
- Manage/Document all system interoperability.
- Manage software configuration deployments and staging.
- Provide technical support for customer training and operations.
- Works with the Lead Project Manager and Systems Engineer to facilitate delivery of all scheduled tasks and product functionality.

PROJECT ENGINEER, ASSOCIATE PROJECT ENGINEER – UL LLC, MELVILLE, NY

- Certification (UL, cUL, ULC Listing), performance and safety evaluation of Access Control, Burglary and Fire Alarm equipment in compliance with regulatory Standards and National Code.
- Full project engineer and manager from end to end.
- Determine project scope, quote/cost, specifications, Standards, test plan and completion schedule.
- Establish and conduct testing plan for environmental, electrical (low/high voltage), software operation, monitoring and attack tests.
- Products include Residential and Commercial Burglar Alarm or Fire Alarm systems with software/hardware Alarm monitoring receivers, Power Supplies, Radio Transmitters, Wireless control interfaces, Access Control Panels, RF Readers, Door Controllers, Locks, Motion Sensors, Glass Breaks, Electrified Hinges/Switches, Breathalyzers, Touchscreen keypads, Sounders.
- Project Handler on Record

ELECTRICAL ENGINEER – CLEVER DEVICES LLC. PLAINVIEW, NY

- Direct report to Sr. Hardware Systems Engineer. Assist in development and maintenance of focus IVN and secondary hardware products. Circuit prototyping, BIOS configuration, troubleshooting, hardware and software integration.
- Embedded control design and programming.
- C++ parser coding and OS development
- Customer demonstrations and field engineering

Key Projects:

- City of Niagara Falls Transit Merger with Saint Catherine's Transit and Welland Regional
- SMART-Detroit
- DDOT Detroit
- RFTA
- DTPM Chile
- NJTransit
- Centro
- MassPort
- NICE
- METRA
- Dayton

Clever Devices' Products:

- CAD/AVL
- BusTime RTPI
- BusLink
- CleverReports
- AVA
- AVM
- CleverVision
- Wayside Signs
- Ridecheck Plus
- CleverWorks
- SmartYard
- Disruption Management
- CAD Mobile
- BusWare/CleverWare
- Greyhawk Para
- Speakeasy2
- Clever APC
- Turn Warning
- IVN3/4/5

Integration Experience:

- Motorola, TETRA Radio
- GFI, Trapeze, Wayfarer Farebox
- Hella, IRIS APC
- GIRO/Hastus Scheduling
- Seon/Apollo DVR
- VoIP
- Cradlepoint, Digi, Sierra Wireless, Bluetree modems
- Luminator/Twinvision Signs
- Sunrise/Hanover Signs

#210009D

Clever Devices

Travis Nolan

ENGINEERING PROJECT MANAGER

Education:

- Currently pursuing Associates Degree in Microcomputer Technology and Business Management

Specialization:

- Hardware Selection Engineering Designs
- Project Management
- Installation Design/Deployment & Management
- Systems Design, Operations & Maintenance

Years of Experience:

- 19

Employment History:

- Engineering Project Manager, Clever Devices Ltd., 2012 – Present
- Manager of Project Engineering, XEROX, 2002 – 2012
- Operations Manager, KMC Telecom, 2002
- Technical Associate, Lucent Technologies, 1999 - 2002

Engineering Project Manager with over 19 years of professional experience and well over 75 implementations at Major Mass Transit Organizations that include, but not limited to, Bus Transit, Airports Parking and Revenue Control, Fare Collection, and many other Municipality Revenue systems that required engineering/design, project management, sales, and installation management including: third party equipment selection, creating scopes of works, manpower/all cost requirements, scheduling with site evaluation, civil work planning, installation coordination, as-built drawings, (Visio Professional/Auto CAD) and customer support with extensive experience in working with clients, software development teams, project/program managers, sales representatives and bid support teams.

ENGINEERING PROJECT MANAGER, CLEVER DEVICES, LTD., WOODBURY, NY

- Senior Level design specialist for all Wayside Signs
- Creates designs and deployments for customer facing hardware
- Responsible for client approvals and acceptance to meet all goals and requirements

MANAGER OF PROJECT ENGINEERING, XEROX, NORCROSS, GA

- Manager of Parking Control Designs and deployments
- Created designs and deployments for customer facing hardware
- Responsible for client approvals and acceptance to meet all goals and requirements

OPERATIONS MANAGER, KMC TELECOM, AUGUSTA, GA

- Manager of Telecom switching system
- Product specialist that worked directly with end-users to meet requirements
- Responsible for client approvals and acceptance to meet all goals and requirements

TECHNICAL ASSOCIATE, LUCENT TECHNOLOGIES, ATLANTA, GA

- Associate to the Fiber Optic Long Haul division
- Product specialist that worked directly with end-users to meet requirements
- Responsible for client approvals and acceptance to meet all goals and requirements

Key Projects:

- Miami Dade Transit
- AC Transit
- Culver City Transit
- LeeTran
- Oakville Transit
- RFTA

Clever Devices' Products:

- Digital Signage
- CleverVision
- SmartYard

Integration Experience:

- Integration with multiple manufacturers of new and old signage

B.2.2 PROJECT SCHEDULE

This section contains confidential/proprietary information.

[redacted]

B.2.2.1 RTS RESPONSIBILITIES

One of the many key aspects to a successful project is a clear definition of roles and responsibilities. It is very important that there is a clear communication between Clever Devices and RTS to ensure a successful deployment of the project. To that end, listed below are RTS' responsibilities to help ensure this success. Depending on the final contract Statement of Work, this list may change to meet additional project requirements.

Agency Resources

1. Assemble a project team including a project manager and a technical lead who will have the ability to coordinate and make decisions on behalf of RTS
2. Assign champions and user representatives from various scope areas including Maintenance, Operations, Marketing (for RTPI), IT, Scheduling, Database and System Maintenance (post deployment), etc.

Clever Devices

Collaboration

1. Ensure all relevant project team members participate in periodic project status conference calls, attend all project meetings such as the on-site operational assessment, requirements review, design meetings, and testing (as well as provide timely reviews/approvals) so that the project stays on schedule
2. Provide support in the scheduling of training and related logistics and ensure that necessary staff participates in training sessions
3. Report problems using standard format agreed at the onset of the project
4. Coordinate with project manager to determine initial screen layouts

Networking and IT Infrastructure

1. Arrange for power as described in the RFP/Addendum for VMS signs
2. During the design phase, Clever Devices will work with RTS to clearly define the exact location of the signs, electrical runs and networking configuration. RTS will need to provide proper staff and reviews to sign off on the solution
3. Provide Clever Devices remote access via VPN or other secure solution to the servers and infrastructure for support of administration, configuration, deployment, and support of the system

Wayside

1. Assist Clever Devices where necessary in obtaining necessary permits or permissions for any activities requiring outside authorization

B.2.3 Project Approach

At Clever Devices, we recognize that the overall management of your project is vital to its success. Simply put, the goal of project organization is the effective and efficient accomplishment of the project objectives. As your project moves through the pre-defined project phases, it can have a long-lasting effect on your operations, staff, and public perception.

Over the last thirty-plus years, Clever Devices has developed a proven project management strategy based upon our own experience and the valuable lessons learned by successfully deploying over 200 deployments throughout North America. Additionally, our plan is founded on the general project management principles set forth by the United States Federal Transit Administration and the guidelines set forth by the Project Management Institute's Project Management Body of Knowledge (PMBOK®).

Our project management plan is a guide for action and is just one of the places where RTS is sure to realize the value in partnering with Clever Devices. Our major project tasks include the following:

- Kick-off Meeting / Design Review / Sign Location Engineering
- Hardware Procurement / Software Configuration / Demonstration of Sign Prototype
- Installation
- System Acceptance & Project Closeout

B.2.3.1 Kick-Off Meeting, Design Review, and Sign Location Engineering

Clever Devices will conduct a project kick-off meeting where we will review RTS' goals, contract scope, and major milestones. During this meeting, the roles and responsibilities of Clever Devices' and RTS' teams are clarified. Clever Devices and RTS will review the immediate upcoming tasks in detail to support the requirements review, and design phases of your project. At this meeting, the project schedule is discussed,

and critical path items are highlighted. All actions and issues will be recorded by Clever Devices' project manager.

At Clever Devices, our systems engineer produces the technical solution of the system and reviews the design with RTS. As necessary, the systems engineer will utilize Clever Devices' subject matter experts such as product managers, IT, system experts, and data experts. Clever Devices will provide the required documentation for the design.

Key Clever Devices tasks during the Design Phase	
Wayside • Design and document installation at each site or site type for real-time passenger information signs	**Information Technology** • Establish remote access to RTS' network • Create the BOM for any 3rd party COTS software

Items Discussed/Described/Clarified in the Design Phase		
• System Architecture Overview	• Hardware Description, to include interface and configuration	• Software Description, to include user interface and sign configuration
• Description of Wayside Equipment	• Description of all 3rd Party Interfaces, as applicable	

B.2.3.2 Hardware Procurement, Software Configuration, and Demonstration

During this phase Clever Devices builds and configures the system and validates the 3rd party interfaces and begins to procure hardware. Once procured and validated, Clever Devices will provide a demonstration of a Sign Prototype to ensure it meets RTS' expectations.

B.2.3.3 Installation

Clever Devices will provide an installation supervisor, who bears responsibility for installation quality and testing to pre-set standards. ATPs are conducted following the installation of each sign. Any and all deficiencies will be rectified before the initiation of the System Acceptance Test.

Clever Devices will document the installation plan and submit to RTS for approval. Clever Devices will deploy the solution in accordance with the installation plan. The plan is based on expertise gained on prior projects and our comprehensive assessment of this project gained during the design phase of the project.

Clever Devices' project manager coordinates the installation of all aspects of the system, is responsible to stage all materials to the site, and manages the installation subcontractor. The schedule will be coordinated with RTS' project manager or designated person.

B.2.3.3.1 IT / Server Installation

The central sign health and content management software solutions are not very resource intensive. They will be added to existing hosted resources available and or currently being deployed for the CleverCAD system upgrade.

Clever Devices

B.2.3.4 TRAINING

Training is probably the most important element in achieving a successful project. You can have the best products available, but if RTS' employees do not know how to use the system, then your deployed project will not succeed. Our experiences from previous deployments show that ongoing training has provided the best value to our clients and as we deploy our products, we can then make sure the end users fully understand their new technology.

The training plan will detail the scope, schedule, course content, training time requirements, and recommended attendees. This includes the training manuals in accordance with the RFP. Our training materials will cover every function available to RTS' users. Training will be delivered by experienced Clever Devices representatives and will adhere to all training course requirements needed to ensure the end users fully learn how to operate, administer, and maintain the systems.

Clever Devices will require the following resources from RTS:

- Network and application access for Trainer
- List of student names for each class

Training materials will include presentations, instructor manuals, student workbooks and application user guides/manuals. The documentation that is used in classes will be available to RTS as softcopies with permission to reproduce.

B.2.3.4.1 TRAINING COURSE SYLLABI

An overview of the proposed training courses is provided below, including a description, intended audience, course duration and prerequisite information.

B.2.3.4.1.1 CONTENT MANAGEMENT TRAINING SYLLABUS

Audience	Those intending to manage and those responsible for Content Management audio and video functions and content.
Duration	2-3 Hours
Prerequisites	Basic to advanced knowledge of Microsoft Windows.
General Objective	To enable students to be able to fully understand, design, and manage the Content Management software displays and content.
Overview	This is an instructor-led course includes layout design, configuration management, operation, and monitoring of Content Management. In addition, content creation is covered. The course material is presented with a combination of slides and live software screen demonstration. Formal instruction includes hands-on, practical learning on the system software coupled with question-and-answer interaction throughout.
Topics	• Overview of Content Management System • Content Management System (CMS) • Network monitoring – Proof of Play
Documents Utilized	User Guide
Location (s)	Remote via Teams

Clever Devices

B.2.3.5 Completion of Installation and System Verification

System Verification and Project Closeout will occur at the completion of installation of the signs and include verification of the sign operation.

Once successful installation and operation is verified, system warranty begins.

B.2.3.6 Warranty and Maintenance

Clever Devices prides itself on providing the best service and support in the industry. Over the past 30 years, we have been committed to partnering with our clients to provide high quality transportation to the riding public. As part of this goal and mission, our commercial off-the-shelf (COTS) products are highly reliable, which minimizes warranty costs and results in a low total cost of ownership.

To support the proposed warranty, maintenance and support services, Clever Devices will provide service employees, agents, and subcontractors that have the necessary skills, training, and background to provide support competently and professionally for the Clever Devices systems. For this proposal, we have included Samsung ProCare for the proposed signs. This includes diagnostic services and onsite support, if necessary. We want to reassure RTS that your customer service experience will remain the same. All calls/notifications of an issue will be directed through Clever Devices' technical support. Then, if remote resolution is not successful, Clever Devices will coordinate with Samsung ProCare for onsite support.

Clever Devices is committed to providing excellent customer service and prides itself on working with our clients to develop efficient and effective service processes that meets their needs. We are confident that by choosing Clever Devices you will minimize your inherent risk, not only because we have a superior service department, but we also have extensive experience working with multiple transit agencies throughout North America.

During the warranty and maintenance periods, the single point of contact for all warranty administration will be Elvis Santana, Director of Service who can be reached via phone, email, or mail:

- Telephone: (516) 433-6100
- E-mail: ESantana@CleverDevices.com
- 300 Crossways Park Drive, Woodbury, NY 11797

Clever Devices will provide hardware and software warranty and support services on all deployed components covered under this agreement. The warranty period commences at System Acceptance. Additionally, RTS shall have the option of purchasing additional years of warranty, following the expiration of the initial warranty period.

The table below provides an overview of Clever Devices' proposed warranty, maintenance, and support services.

TABLE 1: BASE CLEVER DEVICES' SERVICES

SUPPORT CATEGORY	DESCRIPTION
Technical Support & Call Center	• Available as long as a warranty or service agreement is in place • Available 24 hours a day, 7 days a week, 365 days per year, the Technical Support & Call Center will act as the escalation point for all service requests generated by RTS
Hardware Warranty	• Applies to equipment provided by Clever Devices • Repair or replacement of returned hardware via Samsung ProCare
Software Warranty	• Applies to fixed-end software provided by Clever Devices • Software warranty includes updates for bug fixes and patches

The following table identifies the response times provided under the proposed warranty, maintenance, and support services.

TABLE 2: SERVICE RESPONSE TIME

PRIORITY CATEGORY	RESPONSE TIME	DEFINITION
Critical Issues	2 hours from notification	• Critical issues resulting in central system functional systemic failures • Service requests into Clever Devices' Technical Support department • Provided by the Technical Support & Call Center • Establish VPN access, if required • Onsite support provided by Samsung ProCare, when remote resolution is not successful
Non-Critical Issues	Next Business Day	• For issues where major functionality is not impacted • A workaround is required and available to resume system functionality • Establish VPN access, if required • Provided by the Technical Support & Call Center

Clever Devices

B.2.3.6.1 TECHNICAL SUPPORT AND CALL CENTER

Clever Devices' Technical Support department provides a centralized point of contact for all issues reported and its services are included as part of the hardware warranty and software warranty solution. The Technical Support & Call Center is available by phone 24 hours a day, 7 days a week, and 365 days a year and will provide remote support beginning the date the system is installed. Clever Devices' Technical Support department will act as the escalation point for all service requests.

Backed by Clever Devices' software, deployment, and applications engineers, the Technical Support team provides customers with prompt service and incident resolution. The Technical Support department is located at Clever Devices' main office in Woodbury, NY.

Requests for service will be generated by RTS personnel contacting Clever Devices' Technical Support personnel. RTS will be able to report incidents and request service support to Clever Devices' Technical Support department via phone or email:

- Toll-free Technical Support Service: 1-888-478-3359
- E-mail: TechnicalSupport@CleverDevices.com

Regular business hours are Monday through Friday, 8:30am to 5:30pm Eastern Time, with extended hours offered as per customer requirements. All other times are considered "after-hours." All after-hour calls should be made solely to the Tech Support phone at 1-888-478-3359. After-hour calls will be forwarded to an answering service and then to a Clever Devices on-call support representative.

Upon discovery of an error, and if requested by Clever Devices, the customer agrees to submit a listing of any data, which may include data log files, so that Clever Devices may reproduce the error and the operating conditions under which the error occurred or was discovered.

Clever Devices' Technical Support & Call Center includes:

- Respond to requests from RTS for support for the diagnosis and restoration of failed central subsystems and onboard systems
- Assign a priority level to each issue
- Create and assign an Incident Tracking Number and provide to RTS
- Document issue specific information and provide diagnostic troubleshooting processes through issue resolution
- Remotely access and troubleshoot issue via Virtual Private Network, as required
- If required, dispatch the resources from Samsung ProCare to assist in diagnosing and repairing of reported critical issues
- If escalation required, coordinate technical resolutions with other Clever Devices' subject matter experts
- Document and communicate issue status with key RTS personnel and Clever Devices' stakeholders throughout issue life cycle
- Track, escalate, and resolve the incident ticket

B.2.3.6.2 HARDWARE WARRANTY

As mentioned above, Clever Devices has partnered with Samsung to provide hardware warranty for the proposed signs. Our Technical Support team will coordinate with Samsung ProCare to dispatch support personnel for timely repair/replacement of faulty signs.

Clever Devices

B.2.3.6.3 SOFTWARE WARRANTY

In order to ensure that our software, which are designed to be free from defects, continue to function properly and be in conformance with the technical requirements. RTS will acquire permanent title to all the system's hardware and non-proprietary software provided under the contract, free and clear of all liens and encumbrances. For all software-related issues reported by RTS, Clever Devices' Technical Support personnel will assign each reported incident an Incident Tracking Number. The Technical Support department will be responsible for tracking, escalating, and resolving the incident ticket.

A reported issue is entered and tracked via Clever Devices' internal issue-tracking system. This process facilitates the management and storage of defects, features and improvements throughout the software development process and allows complete lifecycle management of an issue from creation through closure.

During the warranty period, Clever Devices will furnish at no cost any materials, equipment, software, documentation detailing the operation and maintenance of the software necessary to maintain the system in accordance with the warranty. Clever Devices will provide all updates and upgrades during the maintenance period, and the labor to deploy the update or upgrade, if required to resolve a bug. Clever Devices can quote the cost to deploy all other updates or upgrades, including those to introduce features or enhancements which are above the original published and agreed specification, or product manual.

Clever Devices

C. PRICE PROPOSAL

This section contains confidential/proprietary information.

On the following pages, Clever Devices has provided our pricing on the following page. This pricing information is confidential and proprietary to Clever Devices.

[redacted]

Clever Devices

City of Gainesville
RFP NO. RTSX-210030-DS
Digital Signage and Content Management Software
Price Sheet

Item	Qty	Description	Unit Price	Extended Price
1	2	Outdoor 55" LCD "Butler Plaza" ***Includes:*** - 55" LCD Screen - PC - Ethernet Switch & Cable - Wall Mount - Junction Box Wiring Harness & Enclosure - Power Supply - Web Relay - HDMI Cable - Modem - Antenna - Content License	[redacted]	[redacted]
2	1	Outdoor 55" Dual Sided LCD "Kiosk Rosa Parks" ***Includes:*** - 55" LCD Screen (x2) - PC - Ethernet Switch & Cable - Double sided Kiosk mount - Junction Box Wiring Harness & Enclosure - Power Supply - Web Relay - HDMI Cable - Modem - Antenna - Content License	[redacted]	[redacted]
3	1	Implementation Services ***Includes:*** - Installation - Create PDR SOW, Data Build and Onsite review - Design drawings & meetings - Configuration & Testing - Validate signs work with BusTime in customer config - Project Management - Remote Training	[redacted]	[redacted]
4	1	5 Year Hardware Warranty & Software Maintenance	[redacted]	[redacted]
			[redacted]	
			[redacted]	
			Total	$135,475.00

PROPRIETARY: This document contains information that is proprietary to Clever Devices Ltd. Use or disclosure of any material contained herein without the consent of Clever Devices is strictly prohibited.

Clever Devices

D. QUALIFICATIONS

Clever Devices Ltd. is the largest company in North America dedicated to providing Intelligent Transportation System (ITS) solutions for public transit. We have deployed ITS solutions on over 27,000 buses across the US and Canada. These installations were for transit agencies of varied size, included a multitude of tailored solutions, and were always executed with the utmost dedication to the client. In fact, one in three urban transport buses in the US and Canada use our ITS systems, and we are able to deploy our solutions across any fleet size.

Over
30 YEARS
in public transportation technology

We know first-hand how important public transportation is in sustaining communities and building strong local economies. By connecting people to employment, health, educational, and other important opportunities and services, public transportation supports the growth and development of a community, leading to increased wages and improved local business environments. Furthermore, safe, accessible, and reliable public transportation reduces traffic congestion and reduce environmental impacts. These societal benefits, driven by public transportation, are why we do what we do. They are the reason that throughout each deployment and the development/improvement of every product, Clever Devices maintains focus on providing public transportation with innovative, state-of-the-art, technology-based solutions. This focus not only results in beneficial products for our direct clients, the transit agencies, but also for reliable service, useful information, and a pleasant transit experience for our indirect clients, your riders. We strive to help each agency accomplish the following:

- Improve the Rider Experience
- Increase Safety and Security
- Augment Operational Efficiencies
- Support Socially and Environmentally Responsible Mass Transportation

Clever Devices' commitment to doing right by our clients and transit riders (as well as becoming a trusted partner for every client) is ingrained into our core values and corporate culture and we strive to foster a corporate culture wherein our core values are not only understood but are embraced and celebrated. Our core values are inherent in everything we do and are an integral component of the fabric of our company. We promote, reward and recognize actions that demonstrate these core values.

FIGURE 2: OUR CORE VALUES

D.1 KNOWLEDGE AND PAST PROJECT EXPERIENCE

Our entry into the ITS market started with the delivery of ADA-compliant voice announcement systems. Building on our success with this, we perfected on-board automation technology for the transit fleets, setting the industry standard for functionality such as:

- Computer-Aided Dispatch / Automatic Vehicle Location (CAD/AVL)
- Automatic Stop Announcements (ASA)
- Automatic Passenger Counters (APC)
- Real Time Passenger Information Systems (RTPI)
- Automatic Vehicle Health Monitoring (AVM)
- Voice over Internet Protocol for Transit Communications (VoIP)

Clever Devices' intelligent transit technology is not only our primary line of business; it is our only business. We dedicate 100% of our resources to providing and deploying advanced sustainable technology solutions to the mass transit industry, setting us apart from most intelligent transportation system providers. Furthermore, we have deployed our solutions successfully at over 300 transit agencies around the world.

D.2 Capabilities and Dedication to Continued Investment

Over the last 30 years, Clever Devices' portfolio has experienced an unparalleled record of achievement in design and delivery of intelligent transportation systems and CAD/AVL infrastructure. Over these years, we have continuously expanded our solutions to better serve our clients and have repeatedly raised the bar in the ITS industry. We are also active members of both APTA and CUTA, serving on both the APTA and CUTA Board of Directors and many of these organizations' committees. We are proud to be affiliated with these organizations and they provide invaluable insight into the needs and concerns of our clients.

Our continued investment in next-generation, sustainable products and advanced functionality ensures our clients receive the maximum benefit (such as operational efficiencies and additional revenue opportunities) available. The consistency of our R&D investments means that the Clever Devices ITS products our clients receive continue to be enhanced, addressing their needs as they continue to evolve. We continue to develop innovative public transportation solutions that increase accessibility and security while reducing operating and maintenance costs, as well as invest in our existing products.

Our commitment to innovation for our ITS products and integration projects has resulted in a number of significant achievements, awards, and industry firsts, including those listed in the following summary table:

Clever Devices' Distinctions and Awards	
2019	Clever Devices wins Corporate Patron of the Year from Tennessee Public Transportation Association
2019	Clever Devices receives APTA Bronze- Level Sustainability Committee Recognition
2017	Clever Devices acquires M.A.I.O.R, a leading provider of fixed route scheduling software
2016	Implemented Real Time Bus Detour and Bus Bridging Technology
2016	Implemented CleverVision infotainment system for advertising and revenue generation
2015	Implemented Automatic Consist Detection for Rail and the ENO Certified IVN-R
2015	Implementing the first North American TETRA radio project at New Jersey Transit
2015	Clever Devices acquires RSM Services, the leading provider of passenger counting software
2014	Ranked as one of the Deloitte's 2014 Technology Fast 500
2013	Ranked as one of the Deloitte's 2013 Technology Fast 500
2013	LISTnet winner for CleverCAD
2012	Clever Devices acquires Digital Recorders
2012	Clever Devices acquires GreyHawk Technologies, a leading paratransit solutions provider
2012	Living Labs Global Award for Modern Urban Transport Information
2012	LISTnet winner for Automatic Vehicle Monitoring (AVM)
2011	First VoIP-based voice communications deployed at a US transit system

Clever Devices

2010	Chicago Innovation Award for BusTime real-time traveler information system
2009	First Automatic Passenger Counting (APC) system certified for NTD Reporting
2007	Deployed largest traveler information system in North America
2006	First Airport Shuttle AVL system deployed in the US
1999	First automatic vehicle health monitoring system installed on a US public transit
1998	Helen Keller Award of Appreciation for commitment to the Americans for Disabilities Act
1998	New York City Transit – Innovative Technology Supplier of the Year
1997	First automatic voice announcement system installed on a US public transit vehicle
1995	First GPS-based bus stop announcements (BSA) system installed on a US transit vehicle
1988	First ASA system deployed in the airport market at John F. Kennedy International Airport

D.3 ORGANIZATIONAL STRUCTURE

Clever Devices was founded in 1987 and became incorporated on March 2, 1988. For over 30 years, we have built an unparalleled record of achievement in the design and delivery of industry-leading ITS technology. Clever Devices is a privately held corporation, and we have enjoyed stable ownership throughout our history. Francis Ingrassia, Chief Executive Officer, and Francis "Buddy" Coleman, Chief Customer Officer, (as well as the rest of the Senior Management Team) are actively involved in the day-to-day business. This team ensures Clever Devices as a whole is responsive to our customers and focused on successfully meeting our commitments.

Together the leadership team represents collective 200+ years of experience in public transportation.

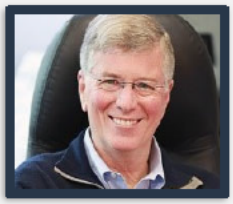

Frank Ingrassia
Chief Executive Officer

Buddy Coleman
Chief Customer Officer

Andrew Stanton
Chief Operating Officer

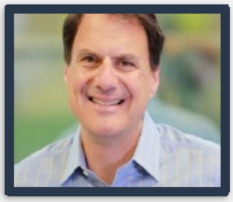

Michael Elgarten
Chief Strategy Officer

Joseph Saporita
Sr. Vice President
New Ventures

Dean Soucy
Senior Vice President
Engineering

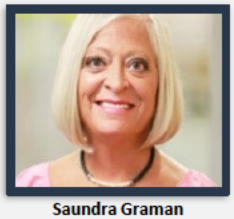

Saundra Graman
Senior Vice President
Business Development

Craig Lang
Senior Vice President
Business Development

Kirk Shore
Senior Vice President
Integrated Product Team

Christos Karanicolas
Senior Vice President
Engineering

Monica Malhotra
Senior Vice President
Operations

D.4 Location of Offices and Number of Employees

Our corporate headquarters is located in Woodbury, New York. With over 500 employees who are 100% dedicated to providing solutions that help you manage your business and operations, we have regional offices located in Morrisville, NC; Richmond, VA; and Toronto, Ontario. Our staff is highly experienced, and uniquely understand the markets we serve. This knowledge is gained through direct project experience and previous employment with transit agencies. In fact, our Senior Vice President of the Integrated Product Team, who oversees the development of our technology, is a former senior transit agency member.

D.5 Financial Strength, Stability, and Capacity

This section contains confidential/proprietary information.

Clever Devices is financially sound and has 30 years of experience in providing cutting edge transportation technology. As mentioned above, we have partnered with a multitude of transit agencies to provide comprehensive solutions for the benefit of their operations, staff, and riders. We possess sufficient internal financial strength and external borrowing capacity to meet the financial demands of this project. On the following page, we have provided a copy of a letter from our bank affirming our financial capacity. Clever Devices considers this document to be confidential commercial and financial information, and accordingly, we request that this material be exempt from any public disclosure.

D.6 REFERENCES

On the following pages, Clever Devices has provided the completed Reference Form from the RFP, as well as three (3) detailed reference sheets for similar projects completed in the last three (3) years.

References are included for the following agencies:

1. **Lee County Transportation (LeeTran)** – Fort Myers, Florida
2. **Greater Dayton Regional Transit Authority (GDRTA)** – Dayton, Ohio
3. **Detroit Department of Transportation (DDOT)** – Detroit, Michigan

LEE COUNTY TRANSPORTATION (LEETRAN)

Mode:

- Bus

System Summary:

- 65 Fixed Route Vehicles
- 11 Non-Revenue Vehicles

Period of Performance:

- November 2015 – October 2017

Key Clever Devices Staff:

- Johnna McQuinn, Strategic Accounts Manager
- Kevin Mah, Project Manager

Key Agency Staff:

- Paul Goyette, Deputy Director Safety, Security, Customer Service, Facilities, Fixed Route Operations (Now at CUTR)
- Robert Gorneau, Transit Facilities Route Maintenance & IT Systems Manager

References:

- Steven Manhertz, Technology Systems Specialist
  3401 Metro Parkway
  Fort Myers, FL 33901
  239-533-0245
  smanhertz@leegov.com

Clever Devices provided CleverCAD, BusTime, CleverReports, BusLink, and CleverWorks as our base solution for LeeTran. Additionally, we delivered 33 digital signs to display bus arrival information at their transit and transfer centers, as well as 8 kiosks to provide useful information regarding transportation for veteran services.

In addition, we have interfaced to LeeTran's existing UTA APC system Genfare fareboxes, and TwinVision destination signs.

We have delivered the following functionality at LeeTran:

- Computer Aided Dispatch/Automatic Vehicle Location (CAD/AVL)
- Real Time Passenger Information (BusTime)
- Reporting
- Bulk Data Transfer (BusLink)
- Wayside Signage and kiosks

We have integrated with the following functionality at LeeTran:

- UTA Automatic Passenger Counter System
- TwinVision Destination Signs

GREATER DAYTON REGIONAL TRANSIT AUTHORITY (GDRTA)

Mode:

- Bus

System Summary:

- 188 fixed route vehicles
- 80 paratransit vehicles
- 45 non-revenue vehicles
- 2 depots

Period of Performance:

- May 2015 - October 2017

Key Clever Devices Staff:

- Tony Kendall, Strategic Account Manager
- Jay Simpson, Senior Project Manager
- Ellen Mullen, Project Manager
- Joseph Zuniga, Systems Engineer
- Ryan Garman, Project Engineer

Key Agency Staff:

- Brandon Policicchio, Chief Customer and Business Development Officer
- Tim Harrington, Information Systems Manager

References:

- Tim Harrington, Information Systems Manager
  Greater Dayton Regional Transit Authority (GDRTA)
  4 South Main Street
  Dayton, Ohio 45402
  (937) 425-8321
  tharrington@greaterdaytonrta.org

With this project, we replaced an aged ITS system, which used old technology that was not upgradeable. Problems faced by this agency included the inability of operators to find vehicles for pullouts and their paratransit fleet used fixed route on board technology. Additionally, their APC reporting was inaccurate and their RTPI system was not accurate enough to be made available to their ridership.

This implementation involved the dedicated virtual fixed-end environment, onboard IVN units, AVA, CleverCAD CAD/AVL, BusTime real-time passenger information, CleverReports, AVM for vehicle monitoring, SmartYard depot management, GreyHawk paratransit units, as well as interfacing to their existing radio system. The project also included wayside signs for displaying bus arrival predictions and a Dayton-branded website. Additional functionality included interfaces to Trapeze's fixed route scheduling, paratransit scheduling, and workforce management applications. By providing our Ridecheck Plus solution and integrating to GDRTA's existing APCs, as well as providing additional APCs for the remainder of the fleet, the agency's reporting accuracy greatly improved.

Clever Devices supplied, installed, and commissioned a turnkey, complete, integrated, and scalable CAD/AVL and Interactive Voice Response (IVR) system to support operations of RTA. In addition to the design and installation of the system, the scope of work included all testing, training, documentation, warranty and maintenance required to achieve systems acceptance as outlined in the RFP.

We have delivered the following functionality at GDRTA:

- Computer Aided Dispatch/Automatic Vehicle Location (CAD/AVL)
- Automatic Voice Announcements (AVA)
- BusTime Real-Time Passenger Information (RTPI)
- Ridecheck Plus Ridership Reporting
- Automatic Passenger Counters (APCs)
- Automatic Vehicle Monitoring (AVM)
- SmartYard Depot Management
- GreyHawk Paratransit Onboard Units

We have provided the following integration at GDRTA:

- Radio Communications
- Trapeze Scheduling
- Paratransit Scheduling
- Workforce Management Applications
- Transit Master APCs

DETROIT DEPARTMENT OF TRANSPORTATION (DDOT)

Mode:

- Bus

System Summary:

- 320 Fixed Route Vehicles

Period of Performance:

- January 2018 - June 2021 (Pending)

Key Clever Devices Staff:

- Hank Rask, Project Manager
- Alex Kuman, Project Engineer

Key Agency Staff:

- Amy Sovereign, Program Management Officer
  Department of Innovation and Technology

References:

- Amy Sovereign
  Program Management Officer
  Department of Innovation and Technology
  2 Woodward Avenue, Suite 1212
  (734) 637-5616
  sovereigna@detroitmi.gov

In 2017, Clever Devices was awarded a contract with DDOT to supply an intelligent transportation system on their fleet of 320 vehicles. The project included the implementation of our CleverCAD CAD/AVL solution with CleverReports business intelligence reporting, BusTime real-time passenger information, AVM vehicle health monitoring, Enghouse Sched 21 fixed-route scheduling with Interactive Voice Response (IVR), Alesig Customer Service Software, all backed by our on-board Intelligent Vehicle Network (IVN) platform.

DDOT has 29 LED signs at the Rosa Parks transit center at the bus bays, along with two 55-inch LCD signs inside the transit center. DDOT also has kiosks that are connected to our BusTime software to provide passengers with information at the transit center.

More recently, in 2020, Clever Devices began enhancements to DDOT's BusTime solution, which included implementing more features to the Data and Reporting capabilities of the solution.

We have delivered the following functionality at DDOT:

- Computer Aided Dispatch/Automatic Vehicle Location (CAD/AVL)
- Business Intelligence Reporting (CleverReports)
- BusTime Real-Time Passenger Information (RTPI)
- Automatic Vehicle Monitoring (AVM)
- Real-Time Passenger information for Wayside Signs via BusTime

We have integrated with the following functionality at DDOT:

- Enghouse Sched 21 Scheduling
- Alesig Customer Service Software
- Wayside Signs

Clever Devices

E. APPENDIX 1: REQUIRED FORMS AND CERTIFICATIONS

Clever Devices has provided the following completed forms, certification, and documentation requested in the RFP:

1. RFP Cover Page
    a. Following the forms and certifications, Clever Devices has returned the signed addenda, as requested in the RFP.
2. Address each Minimum Qualifications
    a. Please see section D for our corporate qualifications, section D.6 for references, and section B.1.2 for confirmation that we are in good standing, in all aspects, with the City of Gainesville.
3. Provide a Statement of all Qualifications
    a. Clever Devices has the experience and expertise to successfully complete this project for the City of Gainesville. Please see section D for our corporate qualifications.
4. Pricing Proposal
    a. Please see section C for our Pricing Proposal.
5. Drug-Free Workplace Form
6. Bidder Verification Form
7. References Form
8. Certification Regarding Lobbying
    a. Please note that Clever Devices does not have lobbying activities to disclose.
9. Disclosure of Lobbying Activities
    a. Please note that Clever Devices does not have lobbying activities to disclose.
10. Contractor Responsibility Certification
    a. Following this form, we have included a sample Certificate of Insurance (COI), confirming compliance with the insurance requirements of the RFP.
11. Subcontractor List and Bidder Status
12. Bidder's W-9
13. Copy of any Applicable, Current Licenses and/or Certification required by City/County/State
    a. Clever Devices has included a copy of our Florida Business License, as well as our active registration on SunBiz.
14. Exceptions to the RFP (refer to Part 4, 4.5 Exception to the RFP)
    a. We have proposed a solution that is 100% compliant with your RFP specifications. For more information, please see section B.1.2.
15. Investigation of Alleged Wrongdoings, Litigation/Settlements/Fines/Penalties
    a. Clever Devices has proposed W.W. Gay Fire & Integrated Systems as our subcontractor for this project. We confirm that we do not have any investigations of wrongdoings, litigation and/or settlements, and fines or penalties to report.
16. DBE Utilization Form
    a. Please note that, per the RFP, there is no DBE goal for this procurement.
17. No Bid Survey (Not Applicable)

BID COVER

Procurement Division
(352) 334-5021(main)

Issue Date: March 12, 2021

REQUEST FOR PROPOSAL: #RTSX-210030-DS
Digital Signage and Content Management Software

PRE-PROPOSAL MEETING: ☒ Non-Mandatory ☐ Mandatory ☐ N/A ☐ Includes Site Visit
DATE: April 6, 2021 **TIME:** 9:00 a.m.
LOCATION: via Zoom

QUESTION SUBMITTAL DUE DATE: April 16, 2021

All meetings and submittal deadlines are Eastern Time (ET).

DUE DATE FOR UPLOADING PROPOSAL: April 29, 2021, 3:00 p.m.

SUMMARY OF SCOPE OF WORK:

Purchase complete Digital Signage and Content Management Software (CMS) system for two bus transfer stations, including electrical services.

For questions relating to this solicitation, contact: Daphyne Sesco, Procurement Specialist 3, sescoda@cityofgainesville.org

Bidder is not in arrears to City upon any debt, fee, tax or contract: ☒ Bidder is NOT in arrears ☐ Bidder IS in arrears
Bidder is not a defaulter, as surety or otherwise, upon any obligation to City: ☒ Bidder is NOT in default ☐ Bidder IS in default

Bidders who receive this bid from sources other than City of Gainesville Procurement Division or DemandStar.com MUST contact the Procurement Division prior to the due date to ensure any addenda are received in order to submit a responsible and responsive offer. Uploading an incomplete document may deem the offer non-responsive, causing rejection.

ADDENDA ACKNOWLEDGMENT: Prior to submitting my offer, I have verified that all addenda issued to date are considered as part of my offer: Addenda received (list all) # 1 and 2 — Please see signed addenda attached at the end of this document.

Legal Name of Bidder: Clever Devices Ltd.

DBA: none

Authorized Representative Name/Title: Francis J. Ingrassia, President

E-mail Address: jmcquinn@cleverdevices.com FEIN: 11-2908781

Street Address: 300 Crossways Park Drive, Woodbury, New York 11797

Mailing Address (if different): same as street address

Telephone: (516) 736-0620 Fax: ( )

By signing this form, I acknowledge I have read and understand, and my business complies with all General Conditions and requirements set forth herein; and,

☒ Proposal is in full compliance with the Specifications.

☐ Proposal is in full compliance with the Specifications except as specifically stated and attached hereto.

SIGNATURE OF AUTHORIZED REPRESENTATIVE: Francis J. Ingrassia

SIGNER'S PRINTED NAME: Francis J. Ingrassia **DATE:** 4/27/2021

This page must be completed and uploaded to DemandStar.com with your Submittal.

DRUG-FREE WORKPLACE FORM

The undersigned bidder in accordance with Florida Statute 287.087 hereby certifies that

Clever Devices Ltd. does:
(Name of Bidder)

1. Publish a statement notifying employees that the unlawful manufacture, distribution, dispensing, possession, or use of a controlled substance is prohibited in the workplace and specifying the actions that will be taken against employees for violations of such prohibition.

2. Inform employees about the dangers of drug abuse in the workplace, the business's policy of maintaining a drug-free workplace, any available drug counseling, rehabilitation, and employee assistance programs, and the penalties that may be imposed upon employees for the drug abuse violations.

3. Give each employee engaged in providing the commodities or contractual services that are under bid a copy of the statement specified in subsection (1).

4. In the statement specified in subsection (1), notify the employees that, as a condition of working on the commodities or contractual services that are under bid, the employee will abide by the terms of the statement and will notify the employer of any conviction of, or plea of guilty or nolo contendere to, any violation of Chapter 893 or of any controlled substance law of the United States or any state, for a violation occurring in the workplace no later than five (5) days after such conviction.

5. Impose a sanction on, or require the satisfactory participation in a drug abuse assistance or rehabilitation program if such is available in the employee's community, by any employee who is so convicted.

6. Make a good faith effort to continue to maintain a drug-free workplace through implementation of this section.

As the person authorized to sign the statement, I certify that this bidder complies fully with the above requirements.

Bidder's Signature

4/28/2021
Date

In the event of a tie bid, bidders with a Drug Free Workplace Program will be given preference. To be considered for the preference, this document must be completed and uploaded to DemandStar.com with your Submittal.

BIDDER VERIFICATION FORM

QUALIFIED SMALL BUSINESS AND/OR SERVICE DISABLED VETERAN BUSINESS STATUS (Check one)
Is your business qualified, in accordance with the City of Gainesville's Small Business Procurement Program, as a local Small Business? ☐ YES ☒ NO

Is your business qualified, in accordance with the City of Gainesville's Small Business Procurement Program, as a local Service-Disabled Veteran Business? ☐ YES ☒ NO

REGISTERED TO DO BUSINESS IN THE STATE OF FLORIDA
Is Bidder registered with Florida Department of State's, Division of Corporations, to do business in the State of Florida?
☒ YES ☐ NO (refer to Part 1, 1.6, last paragraph)

If the answer is "YES", provide a copy of SunBiz registration or SunBiz Document Number (#F10000003263)
If the answer is "NO", please state reason why: _____

DIVERSITY AND INCLUSION (Applies to solicitations above $50,000)
Does your company have a policy on diversity and inclusion? YES NO

If yes, please attach a copy of the policy to your submittal.

Note: Possessing a diversity and inclusion policy will have no effect on the City's consideration of your submittal, but is simply being requested for information gathering purposes.

Clever Devices Ltd,
Bidder's Name

Francis J. Ingrassia, President
Printed Name/Title of Authorized Representative

Signature of Authorized Representative \ 4/28/2021
Date

This page must be completed and uploaded to DemandStar.com with your Submittal.

#210009D

State of Florida
Department of State

I certify from the records of this office that CLEVER DEVICES LTD. INCORPORATED is a New York corporation authorized to transact business in the State of Florida, qualified on July 21, 2010.

The document number of this corporation is F10000003263.

I further certify that said corporation has paid all fees due this office through December 31, 2013, that its most recent annual report/uniform business report was filed on April 29, 2013, and its status is active.

I further certify that said corporation has not filed a Certificate of Withdrawal.

Given under my hand and the Great Seal of the State of Florida at Tallahassee, the Capital, this the Twenty-third day of September, 2014

Ken Detzner

Secretary of State

Authentication ID: CU6431408454

To authenticate this certificate,visit the following site,enter this ID, and then follow the instructions displayed.

https://efile.sunbiz.org/certauthver.html

Detail by Entity Name

Foreign Profit Corporation
CLEVER DEVICES LTD. INCORPORATED

Filing Information

Document Number	F10000003263
FEI/EIN Number	11-2908781
Date Filed	07/21/2010
State	NY
Status	ACTIVE
Last Event	REINSTATEMENT
Event Date Filed	12/05/2014

Principal Address

300 Crossways Park Drive
Woodbury, NY 11797

Changed: 04/26/2021

Mailing Address

300 Crossways Park Drive
Woodbury, NY 11797

Changed: 04/26/2021

Registered Agent Name & Address

C T CORPORATION SYSTEM
1200 SOUTH PINE ISLAND ROAD
PLANTATION, FL 33324

Name Changed: 06/18/2015

Address Changed: 06/18/2015

Officer/Director Detail

Name & Address

Title President / CEO

Ingrassia, Francis
300 Crossways Park Drive
Woodbury, NY 11797

Title Secretary

Title Secretary

Stanton, Andrew
300 Crossways Park Drive
Woodbury, NY 11797

Title VP

Coleman, Francis
300 Crossways Park Drive
Woodbury, NY 11797

Title Chairman of the Board

Ingrassia, Francis
300 Crossways Park Drive
Woodbury, NY 11797

Annual Reports

Report Year	Filed Date
2019	03/18/2019
2020	05/01/2020
2021	04/26/2021

Document Images

04/26/2021 -- ANNUAL REPORT	View image in PDF format
05/01/2020 -- ANNUAL REPORT	View image in PDF format
03/18/2019 -- ANNUAL REPORT	View image in PDF format
04/02/2018 -- ANNUAL REPORT	View image in PDF format
04/17/2017 -- ANNUAL REPORT	View image in PDF format
03/28/2016 -- ANNUAL REPORT	View image in PDF format
06/18/2015 -- Reg. Agent Change	View image in PDF format
06/09/2015 -- ANNUAL REPORT	View image in PDF format
12/05/2014 -- REINSTATEMENT	View image in PDF format
04/29/2013 -- ANNUAL REPORT	View image in PDF format
01/23/2012 -- ANNUAL REPORT	View image in PDF format
07/26/2011 -- ANNUAL REPORT	View image in PDF format
07/21/2010 -- Foreign Profit	View image in PDF format

Clever Devices

DIVERSITY AND INCLUSION POLICY

Clever Devices' Diversity and Inclusion policy is embedded within our Employee Guidelines, as well as in our Affirmative Action Program. We have included pertinent sections of from our Employee Guidelines below and are including a copy of our Affirmative Action Policy.

EMPLOYEE GUIDELINES

EQUAL EMPLOYMENT OPPORTUNITY – PAGE 13

Clever Devices is an equal employment opportunity employer and complies with all applicable federal, state and local fair employment practices laws. Clever Devices strictly prohibits and does not tolerate discrimination against employees, applicants or any other covered persons because of race, color, religion, creed, sex , sexual orientation, gender expression, AIDS/HIV status, marital status, gender, gender identity, national origin or ancestry, ethnicity, age, physical or mental disability or serious health condition, pregnancy, reproductive health decisions, veteran status, genetics, victim of domestic violence or any other status or characteristics protected by applicable federal, state or local law (*C1). All Clever Devices' employees, other workers and representatives are prohibited from engaging in unlawful discrimination. This policy applies to all personnel actions including, but not limited to, recruiting, hiring, training, placement, promotion, compensation, benefits, discipline, layoff and termination. Employment decisions are based on merit, qualification, competence and what management believes is in the best interests of Clever Devices.

You should report any claim of discrimination to any member of the Human Resources team.

PROHIBITION OF HARASSMENT – PAGE 15

Clever Devices is an equal employment opportunity employer and complies with all applicable federal, state and local fair employment practices laws. Clever Devices strictly prohibits and does not tolerate discrimination against employees, applicants or any other covered persons because of race, color, religion, creed, sex , sexual orientation, gender expression, AIDS/HIV status, marital status, gender, gender identity, national origin or ancestry, ethnicity, age, physical or mental disability or serious health condition, pregnancy, reproductive health decisions, veteran status, genetics, victim of domestic violence or any other status or characteristics protected by applicable federal, state or local law (*C1). All Clever Devices' employees, other workers and representatives are prohibited from engaging in unlawful discrimination. This policy applies to all personnel actions including, but not limited to, recruiting, hiring, training, placement, promotion, compensation, benefits, discipline, layoff and termination. Employment decisions are based on merit, qualification, competence and what management believes is in the best interests of Clever Devices.

You should report any claim of discrimination to any member of the Human Resources team.

COMPLIANCE – PAGE 47

After your first week of employment, you will receive an email, with directions to complete a series of Compliance Trainings, via WeComply. WeComply is a third-party vendor that Clever Devices uses to administer these training modules. All compliance trainings must be completed within your first 30 days of employment. The topics provided in the trainings include: drug free/alcohol free workplace, global anti-corruption, discrimination, harassment, workplace diversity and inclusion. Please Note: This is not an exhaustive list of topics. Any topics, suggested or provided, within the trainings, are those in accordance with local, state and federal law. The abovementioned topics are subject to change, at any time, due to the changes in the local, state, federal law and regulatory standards.

PROPRIETARY: This document contains information that is proprietary to Clever Devices Ltd. Use or disclosure of any material contained herein without the consent of Clever Devices is strictly prohibited.

300 Crossways Park Drive
Woodbury, NY 11797
Voice: 516-433-6100

2020-2021 AFFIRMATIVE ACTION PROGRAM

For

CLEVER DEVICES LTD.

Program Completed by: _____

Jennifer Goodman
EEO Coordinator

Address: **300 Crossways Park Drive**
Woodbury, NY 11797

Program Approved by: _____

Julie Friedlander
General Counsel

This Affirmative Action Program is effective from December 1, 2015.

Clever Devices Ltd.

AFFIRMATIVE ACTION PROGRAM

STATEMENT OF PRIVILEGE

Copies of this Affirmative Action Program and all related appendices, documents and support data are made available on loan to Government Transit Agencies upon the request of said Agency on the condition that the Agency hold them totally confidential and not release copies to any person whatsoever. This Affirmative Action Program and its appendices and other supporting documents contain confidential information which may reveal, directly or indirectly, the Company's plans for business or geographical expansion or contraction. The Company considers this Affirmative Action Program, all portions thereof and all supporting material to be its private and confidential property and to be on loan to the Agency only under specified conditions, including non-reproduction and non-distribution and to be exempt from disclosure under the Freedom of Information Act upon the grounds, inter alia, that such material constitutes: (1) personnel files, the disclosure of which would constitute a clearly unwarranted invasion of personal privacy and are exempt from disclosure under 5 U.S.C. §552(b)(6); (2) confidential, commercial or financial information which is exempt from disclosure under 5 U.S.C. §522(b)(4); (3) investigatory records compiled for law enforcement purposes, the production of which would constitute an unwarranted invasion of personal privacy and are exempt from disclosure under 5 U.S.C. §552(b)(7); (4) matters specifically exempted from disclosure by statute and are exempt from disclosure under 5 U.S.C. §522(b)(3); and any state, City, and local freedom of information laws.

The Company will submit further detailed documentation supporting this claim of privilege if necessary.

CLEVER DEVICES Ltd.

AFFIRMATIVE ACTION PROGRAM

NON-ADMISSION STATEMENT

It is understood that this Affirmative Action Program, or any part thereof, does not constitute an admission by the Company of any violation of any federal, state or local law and has been developed in order to reaffirm the Company's policy of providing equal employment opportunity for all persons without regard to race, religion, color, national origin, citizenship, sex, age or disability. Goals have been established, where appropriate, to endeavor to meet affirmative action obligations.

This program is not intended to and will not be used to discriminate against any applicant or employee because of race, religion, color, national origin, citizenship, sex, sexual orientation, gender identity, age or disability.

SEX DISCRIMINATION POLICY

In accordance with our policy of equal employment opportunity, we have adopted the following policy prohibiting sex discrimination and sexual harassment in the workplace. In addition to continued adherence to the goals enunciated in our Affirmative Action and Equal Employment Opportunity Policy, we will also continue to do the following as applicable:

I. RECRUITMENT AND ADVERTISEMENT

A. Recruit men and women for all positions, except where sex is a bona fide occupational qualification, without regard to the applicant's or candidate's sex.

B. Ensure that "help-wanted" advertising does not express a sex preference for any job, unless sex is a bona fide occupational qualification for that job.

C. Refrain from placing advertisements in newspapers or other media which are labeled "Males" or "Females," or otherwise segregated by sex, unless sex is a bona fide occupational qualification.

II. JOB POLICIES AND PRACTICES

A. Review personnel policies to avoid discrimination on the basis of sex.

B. Consider employees and applicants of both sexes for assignment, transfer or promotion to all positions for which they are qualified, except where sex is a bona fide occupational qualification.

C. Administer employment opportunities, wages, hours, conditions of employment, pensions, recreation programs and employee benefits without regard to sex.

D. Consider married and unmarried men and women equally in all personnel actions, including the administration of wages and benefits, without regard to the number of dependents which an individual may support or maintain. Retirement age and retirement benefits will be equal for both sexes.

E. Provide appropriate facilities, e.g., rest rooms and locker areas, for employees and applicants of both sexes.

F. Refrain from reliance upon state laws which conflict with Title VII of the Civil Rights Act of 1964, as amended, and are superseded thereby.

G. Provide leaves of absence to employees, without regard to an employee's sex. No employee will be discriminated against because of pregnancy. Following childbirth, and upon signifying her intent to return within a reasonable time, the Company will reinstate such employee to her original job or to a position of like status and pay, without loss of service credits.

III. SENIORITY

Consider employees' seniority and administer any seniority system without regard to employees' sex.

IV. DISCRIMINATORY WAGES

Determine wage schedules without regard to sex. There will be equal pay for equal work.

V. SEXUAL HARASSMENT

The EEO Coordinator shall notify all supervisors and managers that they are prohibited from engaging in, tolerating or otherwise promoting unwelcome sexual advances, requests for sexual favors and other verbal or physical conduct of a sexual nature by employees or supervisors, when (1) submission to such conduct is made either explicitly or implicitly a term or condition of an individual's employment, (2) submission to or rejection of such conduct by an individual is used as the basis for employment decisions affecting such individual or (3) such conduct has the purpose or effect of substantially interfering with an individual's work performance or creating an intimidating, hostile or offensive working environment.

The EEO Coordinator shall take reasonable steps to prevent sexual harassment from occurring, including, but not limited to, expressing strong disapproval of such conduct, developing appropriate sanctions, informing employees of their right to raise the issue of sexual harassment under Title VII and the procedure therefore and, generally, developing programs to sensitize managers, supervisors and employees to the nature of this problem.
The Company's Harassment Policy can be found in the Employee Handbook, which is distributed to all employees in hard copy and electronically, as amended.

VI. DEFINITION

The terms "because of sex," on "the basis of sex" and "regardless of sex" include, but are not limited to, because of or on the basis of pregnancy, childbirth or related medical conditions. Women affected by pregnancy, childbirth or related medical or physical conditions shall be treated the same for all employment-related purposes, including the receipt of benefits under fringe benefit programs, as other persons who are not so affected but are similarly able or unable to work.

VII. LEAVE OF ABSENCE DUE TO MATERNITY

Leaves of absence due to maternity are treated under our Family and Medical Leave Act Policy, which can be found in the Employee Handbook, and Parental Leave Policy. Both policies are distributed to all employees in hard copy and electronically, as amended.

RELIGIOUS AND NATIONAL ORIGIN DISCRIMINATION POLICY

In accordance with its policy of equal employment opportunity, the Company has adopted the following policy prohibiting discrimination on the basis of religion and national origin, and supporting affirmative action to ensure that all individuals are employed and treated during employment without regard to their religion or national origin.

I. SCOPE OF THIS POLICY

This policy applies to all terms and conditions of employment, including, but not limited to, hiring, upgrading, demotion, transfer, recruitment, recruitment advertising, layoff or recall from layoff, wage and benefit administration and selection for training.

II. OUTREACH AND POSITIVE RECRUITMENT

To determine whether members of all religious and ethnic groups are receiving fair consideration for job opportunities, the Company will consider reviewing its employment practices. Special attention will be directed toward executive and middle-management levels, where employment problems relating to religion and national origin are statistically most likely to occur. Based upon the findings of such reviews, we will undertake appropriate outreach and positive recruitment activities, such as those listed below in order to remedy any existing deficiencies. The scope of our efforts, of course, will depend upon all the circumstances including the nature and extent of any deficiencies and our size and resources. The Company will consider the following actions:

A. Explaining to all employees the Company's obligation to provide equal employment opportunity, without regard to religion or national origin, in such a manner as to foster understanding, acceptance and support among other executives, management staff, supervisors and all other employees and encouraging such persons to take all actions necessary to aid the Company in meeting our obligation;

B. Developing reasonable monitoring procedures to insure that our obligation to provide equal employment opportunity, without regard to religion or national origin, is being fully implemented;

C. Informing periodically all employees of our commitment to equal employment opportunity for all persons, without regard to religion or national origin and

D. Enlisting the assistance and support of recruitment sources (including employment agencies, college placement directors and business associates) in referring applicants without regard to religion or national origin.

III. ACCOMMODATIONS TO RELIGIOUS OBSERVANCE AND PRACTICE

The Company will endeavor to make a reasonable accommodation to the religious observances and practices of any employee or prospective employee, unless such an accommodation will impose an undue hardship on the conduct of our business. Generally, we will try to make reasonable accommodations to the religious observances and practices of any employee or prospective employee who regularly observes Friday evening and Saturday, or some other day of the week, as the Sabbath and/or who observes certain religious holidays during the year and is conscientiously opposed to performing work or engaging in similar activity on such days, when such accommodations can be made without undue hardship on the conduct of our business. In determining the extent of the hardship imposed, we may consider: (a) business necessity; (b) financial costs and expenses and (c) resulting personnel problems. The Company's Holidays, Vacation Days, and Personal/Sick Days Policies can be found in the Employee Handbook, which is distributed to all employees in hard copy and electronically, as amended.

DESIGNATION OF RESPONSIBILITY FOR IMPLEMENTATION

I. EXECUTIVE MANAGEMENT RESPONSIBILITY

As the representative of executive management, the EEO Coordinator has primary responsibility and accountability for implementing, directing and monitoring this Affirmative Action Plan. The EEO Coordinator's responsibilities may include:

A. Implementing the affirmative action programs set forth in this Plan, including the development of policy statements and related internal and external communication procedures to disseminate those policy statements.

B. Developing and supervising the presentation of our equal employment opportunity policy during the supervisory training and new employee orientation programs, which may include question-and-answer sessions for supervisors and employees answering their questions about this Affirmative Action Plan.

C. Designing and implementing an audit and reporting system that will accomplish the following:

1. Measure the effectiveness of our affirmative action programs.

2. Indicate when remedial action is needed.

3. Determine the degree to which our goals and objectives have been attained.

D. Advising management and supervisory personnel on developments in the laws and regulations governing equal employment opportunity.

E. Serving as liaison between the Company and all enforcement agencies.

F. Identifying problem areas and establishing goals and objectives to remedy underutilization in major job groups, if any underutilization exists.

G. Conferring with community organizations representing women and minorities.

H. Auditing periodically our on-the-job training, hiring and promotion patterns to remove impediments to attainment of the Company's goals and objectives.

I. Rating supervisory employees based, in part, upon their efforts and success in furthering the goal of equal employment opportunity and informing supervisory employees of this evaluation practice.

J. Discussing periodically the Company's commitment to equal employment opportunity with managers, supervisors and employees. During these discussions the EEO Coordinator will stress the importance of affirmative action, as well as nondiscrimination.

K. Reviewing the qualifications of all employees to insure that minorities and women are given full opportunities for transfers, promotions and training.

L. Providing access to career counseling for all employees.

M. Conducting periodic audits to ensure that the Company is in compliance with federal and state laws and regulations requiring:

1. Proper display of posters explaining the Company's obligation to engage in nondiscriminatory employment practices.

2. Integration of all facilities which we maintain for the use and benefit of our employees.

3. Maintenance of comparable facilities, including locker rooms and rest rooms, for employees of both sexes.

4. Providing full opportunity for advancement and encouraging minority and female employees to participate in educational, training, recreational and social activities sponsored by the Company.

N. Counseling supervisors and managers to take actions necessary to prevent harassment of employees placed through affirmative action efforts and to eliminate the cause of such complaints. Further, the EEO Coordinator will counsel supervisors and managers not to tolerate discriminatory treatment of any employee by another employee or supervisor and to report all complaints or incidents to him.

O. Establishing an internal complaint system that will enable employees to discuss complaints with the EEO Coordinator whenever they feel that they are being discriminated against on the basis of race, color, religion, sex, national origin or disability status. The Company's complaint procedure for reporting discrimination or harassment can be found in the Harassment Policy and the Business Ethics section of the Employee Handbook, which is distributed to all employees in hard copy and electronically, as amended.

P. Serving as liaison between the Company and community organizations representing minorities and women.

Q. Developing expertise and knowledge of equal employment opportunity guidelines and regulations in order to advise and update top management and supervisory personnel concerning developments affecting our equal employment opportunity program.

II. THE RESPONSIBILITIES OF SUPERVISORS AND MANAGERS

All supervisors and managers have the obligation as part of their general management objectives to support our equal employment opportunity policy and affirmative action program on a day to day basis. Specifically, they must endeavor to:

A. Respond to inquiries about our Affirmative Action and Equal Employment Opportunity Policy, after consulting with our EEO Coordinator.

B. Assist our EEO Coordinator during the investigation of allegations of discrimination.

C. Participate in recruitment and accommodation efforts designed to enable disabled individuals to secure employment and to advance to positions for which they are qualified.

D. Ensure that all federal and state posters explaining the laws prohibiting discrimination are properly displayed.

E. Participate in the development and implementation of affirmative action programs.

IDENTIFICATION OF PROBLEM AREAS

I. UNDERUTILIZATION

The EEO Coordinator conducted a Utilization Analysis comparing the workforce representation of minorities and females to their statistical availability by job group. The Utilization Analysis led the Company to identify underutilization and set goals where appropriate.

The Company is addressing these potential problem areas through specific action oriented programs, which are described in the section of this plan entitled "Action Oriented Programs."

II. IN GENERAL

In addition to the above, the EEO Coordinator will, on an annual basis, as applicable, identify potential problem areas in the total employment process, which may include review of the following areas:

A. Composition of the workforce by minority group status and sex.

B. Overall employee selection process including position specifications, application forms, interviewing procedures, test administration, test validity, referral procedures, final selection process and other employee selection procedures.

C. New hires, promotions, terminations, etc.

D. Utilization of training, recreation and social events and other programs that are sponsored by the Company.

E. Technical phases of compliance with laws prohibiting discrimination in employment and promoting affirmative action programs, e.g., retention of applications, etc.

F. "Underutilization" of minorities or women in specific job groups.

G. "Under-representation" or "Concentration" of minorities or women in specific departments.

H. Lateral or vertical movement of minority or female employees occurring at a lesser rate than that of non-minority or male employees.

I. The selection process eliminating a significantly higher percentage of minorities or women than non-minorities or men.

J. Application and other pre-employment evaluation forms or procedures not in compliance with federal or state law.

K. Position descriptions inaccurate in relation to actual functions and duties of that particular job.

L. De Facto segregation, by race or sex, existing in job titles or job groups.

M. Seniority provisions contributing to overt or inadvertent discrimination by minority group status or sex.

N. Non-support of our affirmative action and equal employment programs and policies by managers, supervisors or employees.

O. Minorities or women significantly underrepresented in training or career improvement programs.

P. Lack of formal techniques for evaluating effectiveness of the programs set forth in this Plan.

Q. Subcontractors and vendors not notified of their responsibility to assist the Company in attaining the goals and objectives set forth in this Plan.

R. Equal employment posters not on display.

If the EEO Coordinator's review indicates that the above-listed problems exist or that other impediments are blocking the entry of minority groups or women into our workforce or into specific jobs, or job groups, the Company will consider corrective action, as outlined in the Action-Oriented Programs section.

ACTION-ORIENTED PROGRAMS

The Company intends to meet the goals set forth in this plan and to continue implementation of its equal employment opportunity policies through action-oriented programs. Described below are the types of actions the Company may consider:

I. DISSEMINATION OF EQUAL EMPLOYMENT OPPORTUNITY POLICY

A. INTERNAL DISSEMINATION

The Company will take the following actions to disseminate its Affirmative Action and Equal Employment Opportunity Policy, as appropriate, on a regular and continuing basis.

1. Including the Equal Employment Opportunity Policy statement in its Employee Handbook, as published. The EEO Policy, which is contained in our Employee Handbook, which is distributed to all employees electronically, as amended.
2. Meeting with supervisory personnel to explain the intent of the Affirmative Action and Equal Employment Opportunity Policy and their individual responsibilities for its implementation. We conduct supervisory training for management about equal employment opportunity and sexual harassment titled "Preventing Discrimination and Harassment for Managers."
3. Scheduling special meetings with employees or using Company newsletters to discuss and explain individual employee responsibilities or opportunities under the affirmation action program. We conduct training for all employees about equal employment opportunity, affirmative action and sexual harassment.
4. Discussing our equal employment policy during any orientation programs we hold, at which time all new employees (and if applicable, transferred and promoted employees) will be advised of our commitment to affirmative action and equal employment opportunity.
5. Posting all required State and federal informational posters on our bulletin boards and updating such posters as required.
6. Including pictures of both minority and non-minority men and women in all employment and consumer advertising.

B. EXTERNAL DISSEMINATION

Our equal employment opportunity policy will be disseminated externally, as considered appropriate, as follows:

1. All recruiting sources, when utilized, will be advised of the Company's policy. The Company will ask for written acknowledgment by each such recruiting source that it will comply with our policy. Thereafter, on a regular basis, such recruiting sources will be notified of our continuing commitment to equal employment opportunity.
2. When we advertise for prospective employees, the advertisement will include language that communicates that we are an Equal Employment Opportunity Employer, such as "We are an Equal Employment Opportunity Employer." We also will direct all advertising media not to place help-wanted advertisements in race or sex-segregated columns.
3. Prospective employees are informed that the Company is an equal opportunity employer which maintains an affirmative action program through the notices we post in areas accessible to applicants and employees and our application for employment.
4. In the event that employees are featured in help-wanted, product or consumer advertising, employee handbooks or manuals or similar publications, both minority and non-minority men and women will be pictured and included.

II. RECRUITMENT AND HIRING

A. Contacting community agencies and educational institutions and seeking referrals of qualified individuals to increase the flow of minority and female applicants. We have contacted and seek referrals from the following affirmative action recruitment sources and educational institutions:

National Society of Black Engineers
Conference of Minority Transportation Officials
The Society of Women Engineers
Lehigh University
Rensselaer Polytechnic Institute
New York Institute of Technology
Stony Brook University
Virginia Commonwealth University
Hofstra University
Farmingdale State College
University of Massachusetts at Amherst

B. Including presentations by minority and female employees; explanations about the job duties and responsibilities of current and future job openings; explanations of our employee selection process; and distribution of recruiting literature when meetings are held with representatives of recruiting sources.

C. Featuring minorities and women when recruiting or consumer advertising includes pictures of employees or work situations, as appropriate.

D. Placing a reasonable proportion of our help-wanted advertising in media directed to minorities and/or women. We advertise on the following web sites and networks Indeed.com, Glassdoor.com, LinkedIn.com. In addition, the Company has an internal referral bonus program for its employees.

E. Evaluating and analyzing job requirements using job-performance criteria. Special attention will be given to academic, experience and skill requirements to insure that such specification are consistent and are free from bias on account of race, color, religion, age, disability, sex or national origin. Where requirements screen out a disproportionate number of candidates from protected groups, the continued use thereof will be evaluated and "validation" will be considered.

F. Selecting and training personnel involved in recruiting, screening, selection, promotion, disciplinary and related processes to eliminate bias in all personnel actions.

G. Avoiding interviewing or recruiting techniques, such as unscored interviews, consideration of arrest records or credit references, which are not reasonably related to the job in question and disparately affect a group protected by law.

III. ADVANCEMENT IN EMPLOYMENT

With regard to our promotion and transfer procedures, we will consider the following:

A. Internal posting or otherwise announcing appropriate promotion and transfer opportunities.

B. Compiling an inventory of academic, skill and experience levels of individual employees, including minorities and women, which are relevant to performance of jobs within each job group.

C. Initiating necessary remedial job training and work-study programs, if possible.

D. Developing and implementing formal employee evaluation programs.

E. Assuring that job descriptions are based on job-related criteria.

F. Requiring managers and supervisors to submit written justification for their decision when apparently qualified minority or female employees are passed over for advancement, transfer or training.

G. Establishing formal career counseling programs, including attitude development, educational aid, job rotation and similar programs.

IV. SEPARATION FROM EMPLOYMENT

When minorities, women or other persons placed through affirmative action efforts or protected by law have experienced adverse personnel decisions, such as termination we will consider:

A. Conduct in-person or phone exit interview, when possible, or send an exit interview form to employees who resign to ascertain the reasons for their voluntary termination and to try and identify "voluntary resignations" that have been caused by unlawful conduct by employees or supervisors.

B. Determining reasons for such adverse decisions, including involuntary terminations, and establishing whether persons not in the protected group with similar work histories and violations of work rules have also been terminated.

C. Attempting to counsel employees about unsatisfactory job performance at least 90 days prior to involuntary termination to provide an opportunity to correct their performance, as practicable.

V. COMPANY SUPPORT OF COMMUNITY ACTION PROGRAMS

The Company notifies appropriate public and private organizations, as noted throughout this Plan, of its commitment to equal employment opportunity and affirmative action and will seek referrals of minorities and women from those sources. In addition, the Company supports the community in which it resides.

INTERNAL AUDIT AND REPORT SYSTEMS

I. AUDITS TO BE PERFORMED

A. This Plan will be reviewed and updated at least annually with new goals to be established after each update and review, as needed. Our plan is updated on an annual basis.

B. All hiring, promotion, placement, etc., will be compared with established goals to measure progress toward attainment thereof.

C. The EEO Coordinator will review progress toward meeting the goals and objectives set forth herein on a periodic basis. Following such review and discussion sessions, recommendations to remedy any unsatisfactory aspects of the Company.

REFERENCE FORM

Name of Proposer: Clever Devices Ltd.

Provide information for three references of similar scope performed within the past three years. You may include photos or other pertinent information.

#1 Year(s) services provided (i.e. 1/2015 to 12/2018): November 2015 – October 2017

Company Name: Lee County Transportation (LeeTran)
Address: 3401 Metro Parkway
City, State Zip: Fort Myers, FL 33901
Contact Name: Steven Manhertz, Technology Systems Specialist
Phone Number: 239-533-0245 Fax Number:
Email Address (if available): smanhertz@leegov.com

#2 Year(s) services provided (i.e. 1/2015 to 12/2018): May 2015 – October 2017

Company Name: Greater Dayton Regional Transit Authority (GDRTA)
Address: 4 South Main Street
City, State Zip: Dayton, OH 45402
Contact Name: Tim Harrington, Information Systems Manager
Phone Number: 937-425-8231 Fax Number:
Email Address (if available): tharrington@greaterdaytonrta.org

---

#3 Year(s) services provided (i.e. 1/2015 to 12/2018): January 2018 – June 2021 (pending)

Company Name: Detroit Department of Transportation
Address: 2 Woodward Avenue, Suite 1212
City, State Zip: Detroit, MI 48226
Contact Name: Amy Sovereign
Phone Number: 734-637-5616 Fax Number:
Email Address (if available): sovereigna@detroitmi.gov

This page must be completed and uploaded to DemandStar.com with your Submittal.

CERTIFICATION REGARDING LOBBYING

The undersigned certifies, to the best of his or her knowledge and belief, that:

1. No Federal appropriated funds have been paid or will be paid, by or on behalf of the undersigned, to any person for influencing or attempting to influence an officer or employee of an agency, a Member of Congress, an officer or employee of Congress, or an employee of a Member of Congress in connection with the awarding of any Federal contract, the making of any Federal grant, the making of any Federal loan, the entering into of any cooperative agreement, and the extension, continuation, renewal, amendment, or modification of any Federal contract, grant, loan, or cooperative agreement.

2. If any funds other than Federal appropriated funds have been paid or will be paid to any person for influencing or attempting to influence an officer or employee of any agency, a Member of Congress, an officer or employee of Congress, or an employee of a Member of Congress in connection with this Federal contract, grant, loan, or cooperative agreement, the undersigned shall complete and submit Standard Form-LLL, "Disclosure Form to Report Lobbying," in accordance with its instructions

3. The undersigned shall require that the language of this certification be included in the award documents for all subawards at all tiers (including subcontracts, subgrants, and contracts under grants, loans, and cooperative agreements) and that all subrecipients shall certify and disclose accordingly.

This certification is a material representation of fact upon which reliance was placed when this transaction was made or entered into. Submission of this certification is a prerequisite for making or entering into this transaction imposed by 1352, title 31, U.S. Code. Any person who fails to file the required certification shall be subject to a civil penalty of not less than $10,000 and not more than $100,000 for each such failure.

Signature of Proposer's Authorized Official

Francis J. Ingrassia
Name of Proposer's Authorized Official

President
Title of Proposer's Authorized Official

4/28/2021
Date

This page must be completed and uploaded to DemandStar.com with your Submittal.

This form does not apply to Clever Devices Ltd.

#210009D

DISCLOSURE OF LOBBYING ACTIVITIES

Approved by OMB
0348-0046

Complete this form to disclose lobbying activities pursuant to 31 U.S.C. 1352
(See reverse for public burden disclosure.)

(Refer to instructions on the next page)

1. Type of Federal Action:	2. Status of Federal Action:	3. Report Type:
☐ a. contract b. grant c. cooperative agreement d. loan e. loan guarantee f. loan insurance	☐ a. bid/offer/application b. initial award c. post-award	☐ a. initial filing b. material change **For Material Change Only:** Year_____quarter_____ date of last report_____

4. Name and Address of Reporting Entity:	5. If Reporting Entity in No. 4 is a Subawardee, Enter Name and Address of Prime:
Prime **Subawardee** Tier_____, *if known :* **Congressional District,** *if known:4c*	**Congressional District,** *if known:*
6. Federal Department/Agency:	**7. Federal Program Name/Description:** CFDA Number, *if applicable:*_____
8. Federal Action Number, *if known :*	**9. Award Amount,** *if known :* $
10. a. Name and Address of Lobbying Registrant *(if individual, last name, first name, MI):*	**b. Individuals Performing Services** *(including address if different from No. 10a)* *(last name, first name, MI):*
11 Information requested through this form is authorized by title 31 U.S.C. section 1352. This disclosure of lobbying activities is a material representation of fact upon which reliance was placed by the tier above when this transaction was made or entered into. This disclosure is required pursuant to 31 U.S.C. 1352. This information will be available for public inspection. Any person who fails to file the required disclosure shall be subject to a civil penalty of not less than $10,000 and not more than $100,000 for each such failure.	Signature:_____ Print Name:_____ Title:_____ Telephone No.:_____Date:_____
Federal Use Only:	Authorized for Local Reproduction Standard Form LLL (Rev 7-97)

This form does not apply to Clever Devices Ltd.

This page must be completed and uploaded to DemandStar.com with submittal. If not applicable, write "Not Applicable" and provide signature next to it.

INSTRUCTIONS FOR COMPLETION OF SF-LLL, DISCLOSURE OF LOBBYING ACTIVITIES

This disclosure form shall be completed by the reporting entity, whether subawardee or prime Federal recipient, at the initiation or receipt of a covered Federal action, or a material change to a previous filing, pursuant to title 31 U.S.C. section 1352. The filing of a form is required for each payment or agreement to make payment to any lobbying entity for influencing or attempting to influence an officer or employee of any agency, a Member of Congress, an officer or employee of Congress, or an employee of a Member of Congress in connection with a covered Federal action. Complete all items that apply for both the initial filing and material change report. Refer to the implementing guidance published by the Office of Management and Budget for additional information.

1. Identify the type of covered Federal action for which lobbying activity is and/or has been secured to influence the outcome of a covered Federal action.

2. Identify the status of the covered Federal action.

3. Identify the appropriate classification of this report. If this is a follow-up report caused by a material change to the information previously reported, enter the year and quarter in which the change occurred. Enter the date of the last previously submitted report by this reporting entity for this covered Federal action.

4. Enter the full name, address, city, State and zip code of the reporting entity. Include Congressional District, if known. Check the appropriate classification of the reporting entity that designates if it is, or expects to be, a prime or subaward recipient. Identify the tier of the subawardee, e.g., the first subawardee of the prime is the 1st tier. Subawards include but are not limited to subcontracts, subgrants and contract awards under grants.

5. If the organization filing the report in item 4 checks "Subawardee," then enter the full name, address, city, State and zip code of the prime Federal recipient. Include Congressional District, if known.

6. Enter the name of the Federal agency making the award or loan commitment. Include at least one organizational level below agency name, if known. For example, Department of Transportation, United States Coast Guard.

7. Enter the Federal program name or description for the covered Federal action (item 1). If known, enter the full Catalog of Federal Domestic Assistance (CFDA) number for grants, cooperative agreements, loans, and loan commitments.

8. Enter the most appropriate Federal identifying number available for the Federal action identified in item 1 (e.g., Request for Proposal (RFP) number; Invitation for Bid (IFB) number; grant announcement number; the contract, grant, or loan award number; the application/proposal control number assigned by the Federal agency). Include prefixes, e.g., "RFP-DE-90-001."

9. For a covered Federal action where there has been an award or loan commitment by the Federal agency, enter the Federal amount of the award/loan commitment for the prime entity identified in item 4 or 5.

10. (a) Enter the full name, address, city, State and zip code of the lobbying registrant under the Lobbying Disclosure Act of 1995 engaged by the reporting entity identified in item 4 to influence the covered Federal action.

    (b) Enter the full names of the individual(s) performing services, and include full address if different from 10 (a). Enter Last Name, First Name, and Middle Initial (MI).

11. The certifying official shall sign and date the form; print his/her name, title, and telephone number.

According to the Paperwork Reduction Act, as amended, no persons are required to respond to a collection of information unless it displays a valid OMB Control Number. The valid OMB control number for this information collection is OMB No. 0348-0046. Public reporting burden for this collection of information is estimated to average 10 minutes per response, including time for reviewing instructions, searching existing data sources, gathering and maintaining the data needed, and completing and reviewing the collection of information. Send comments regarding the burden estimate or any other aspect of this collection of information, including suggestions for reducing this burden, to the Office of Management and Budget, Paperwork Reduction Project (0348-0046), Washington, DC 20503.

CONTRACTOR RESPONSIBILITY CERTIFICATION

The proposer is required to certify compliance with the following contractor responsibility standards by checking appropriate boxes. For purposes hereof, all relevant time periods are calculated from the date this Certification is executed.

	YES	NO
1. Has the firm been suspended and/or debarred by any federal, state or local government agency or authority in the past three years?		X
2. Has any officer, director, or principal of the firm been convicted of a felony relating to your business industry?		X
3. Has the firm defaulted on any project in the past three (3) years?		X
4. Has the firm had any type of business, contracting or trade license revoked or suspended for cause by any government agency or authority in the past three (3) years?		X
5. Has the firm been found in violation of any other law relating to its business, including, but not limited to antitrust laws, licensing laws, tax laws, wage or hour laws, environmental or safety laws, by a final unappealed decision of a court or government agency in the past three (3) years, where the result of such adjudicated violation was a payment of a fine, damages or penalty in excess of $1,000?		X
6. Has the firm been the subject of voluntary or involuntary bankruptcy proceedings at any time in the past three (3) years?		X
7. Has the firm successfully provided similar products or performed similar services in the past three (3) years with a satisfactory record of timely deliveries or on-time performance?	X	
8. Does the firm currently possess all applicable business, contractor and/or trade licenses or other appropriate licenses or certifications required by applicable state or local laws to engage in the sale of products or services?	X	
9. Does the firm have all the necessary experience, technical qualifications and resources, including but not limited to equipment, facilities, personnel and financial resources, to successfully provide the referenced product(s) or perform the referenced service(s), or will obtain same through the use of qualified, responsible subcontractors?	X	
10. Does the firm meet all insurance requirements per applicable law or bid specifications including general liability insurance, workers' compensation insurance, and automobile liability insurance?	X	
11. Firm acknowledges that it must provide appropriate documentation to support this Contractor Responsibility Certification if so requested by the City of Gainesville. The firm also understands that the City of Gainesville may request additional information or documents to evaluate the responsibility of firm. Firm agrees to provide such additional information or supporting documentation for this Certification.	X	

Under the penalty of perjury, the Proposer's authorized representative hereby certifies that all information included in the Contractor Responsibility Certification or otherwise submitted for purposes of determining the Proposer's status as a responsible contractor is true, complete and accurate and that he/she has knowledge and authority to verify the information in this certification or otherwise submitted on behalf of the Proposer by his or her signature below.

Proposer Name: Clever Devices Ltd.

Name/Title of person completing this form: Francis J. Ingrassia, President

Signature: Fran J Ingrassia

Date: 4/28/2021

This page must be completed and uploaded to DemandStar.com with your Submittal.

CLEVDEV-01 #210009D DHARMS

CERTIFICATE OF LIABILITY INSURANCE

DATE (MM/DD/YYYY) 4/2/2021

THIS CERTIFICATE IS ISSUED AS A MATTER OF INFORMATION ONLY AND CONFERS NO RIGHTS UPON THE CERTIFICATE HOLDER. THIS CERTIFICATE DOES NOT AFFIRMATIVELY OR NEGATIVELY AMEND, EXTEND OR ALTER THE COVERAGE AFFORDED BY THE POLICIES BELOW. THIS CERTIFICATE OF INSURANCE DOES NOT CONSTITUTE A CONTRACT BETWEEN THE ISSUING INSURER(S), AUTHORIZED REPRESENTATIVE OR PRODUCER, AND THE CERTIFICATE HOLDER.

IMPORTANT: If the certificate holder is an ADDITIONAL INSURED, the policy(ies) must have ADDITIONAL INSURED provisions or be endorsed. If SUBROGATION IS WAIVED, subject to the terms and conditions of the policy, certain policies may require an endorsement. A statement on this certificate does not confer rights to the certificate holder in lieu of such endorsement(s).

PRODUCER
Insight Companies Inc.
225 Old Country Road
North Wing
Melville, NY 11747

CONTACT NAME: Donna Harms
PHONE (A/C, No, Ext): (631) 393-0500 FAX (A/C, No): (631) 393-0505
E-MAIL ADDRESS: dharms@insightins.com

INSURER(S) AFFORDING COVERAGE	NAIC #
INSURER A: Federal Insurance Company	20281
INSURER B: Great Northern Insurance Comp	20303
INSURER C: Chubb National Insurance	10052
INSURER D:	
INSURER E:	
INSURER F:	

INSURED
Clever Devices, Ltd.
300 Crossways Park Drive
Woodbury, NY 11797

COVERAGES CERTIFICATE NUMBER: REVISION NUMBER:

THIS IS TO CERTIFY THAT THE POLICIES OF INSURANCE LISTED BELOW HAVE BEEN ISSUED TO THE INSURED NAMED ABOVE FOR THE POLICY PERIOD INDICATED. NOTWITHSTANDING ANY REQUIREMENT, TERM OR CONDITION OF ANY CONTRACT OR OTHER DOCUMENT WITH RESPECT TO WHICH THIS CERTIFICATE MAY BE ISSUED OR MAY PERTAIN, THE INSURANCE AFFORDED BY THE POLICIES DESCRIBED HEREIN IS SUBJECT TO ALL THE TERMS, EXCLUSIONS AND CONDITIONS OF SUCH POLICIES. LIMITS SHOWN MAY HAVE BEEN REDUCED BY PAID CLAIMS.

INSR LTR	TYPE OF INSURANCE	ADDL INSD	SUBR WVD	POLICY NUMBER	POLICY EFF (MM/DD/YYYY)	POLICY EXP (MM/DD/YYYY)	LIMITS	
A	X COMMERCIAL GENERAL LIABILITY CLAIMS-MADE X OCCUR X Contractual Llab GEN'L AGGREGATE L MIT APPL ES PER: POLICY X PRO-JECT X LOC OTHER:	X	X	3602-86-48	10/7/2020	10/7/2021	EACH OCCURRENCE	$ 1,000,000
							DAMAGE TO RENTED PREMISES (Ea occurrence)	$ 1,000,000
							MED EXP (Any one person)	$ 10,000
							PERSONAL & ADV INJURY	$ 1,000,000
							GENERAL AGGREGATE	$ 2,000,000
							PRODUCTS - COMP/OP AGG	$ 2,000,000
								$
B	AUTOMOBILE LIABILITY X ANY AUTO OWNED AUTOS ONLY / SCHEDULED AUTOS HIRED AUTOS ONLY / NON-OWNED AUTOS ONLY	X	X	7358-52-17	10/7/2020	10/7/2021	COMBINED SINGLE LIMIT (Ea accident)	$ 1,000,000
							BODILY INJURY (Per person)	$
							BODILY INJURY (Per accident)	$
							PROPERTY DAMAGE (Per accident)	$
								$
	UMBRELLA LIAB / OCCUR EXCESS LIAB / CLAIMS-MADE DED / RETENTION $						EACH OCCURRENCE	$
							AGGREGATE	$
								$
C	WORKERS COMPENSATION AND EMPLOYERS' LIABILITY ANY PROPRIETOR/PARTNER/EXECUTIVE OFFICER/MEMBER EXCLUDED? (Mandatory in NH) Y / N: N If yes, describe under DESCR PTION OF OPERATIONS below	N / A	X	7175-03-40	10/7/2020	10/7/2021	X PER STATUTE / OTH-ER	
							E.L. EACH ACC DENT	$ 1,000,000
							E.L. DISEASE - EA EMPLOYEE	$ 1,000,000
							E.L. DISEASE - POLICY LIMIT	$ 1,000,000

DESCRIPTION OF OPERATIONS / LOCATIONS / VEHICLES (ACORD 101, Additional Remarks Schedule, may be attached if more space is required)
RE: Request for Proposal#RTSX-210030-DS - Digital Signage and Content Management Software

City of Gainsville is included as additional insured. Waiver of subrogation applies in favor of additional insured.

SEE ATTACHED ACORD 101

CERTIFICATE HOLDER

City of Gainsville
PO Box 490, Station 5
Gainesville, FL 32627

CANCELLATION

SHOULD ANY OF THE ABOVE DESCRIBED POLICIES BE CANCELLED BEFORE THE EXPIRATION DATE THEREOF, NOTICE WILL BE DELIVERED IN ACCORDANCE WITH THE POLICY PROVISIONS.

AUTHORIZED REPRESENTATIVE

© 1988-2015 ACORD CORPORATION. All rights reserved.
The ACORD name and logo are registered marks of ACORD

AGENCY CUSTOMER ID: CLEVDEV-01 #210009D DHARMS

LOC #: 0

ADDITIONAL REMARKS SCHEDULE

AGENCY Insight Companies Inc.	NAMED INSURED Clever Devices, Ltd. 300 Crossways Park Drive Woodbury, NY 11797
POLICY NUMBER SEE PAGE 1	
CARRIER: SEE PAGE 1 / NAIC CODE: SEE P 1	EFFECTIVE DATE SEE PAGE 1

ADDITIONAL REMARKS

THIS ADDITIONAL REMARKS FORM IS A SCHEDULE TO ACORD FORM,

FORM NUMBER: ACORD 25 FORM TITLE: Certificate of Liability Insurance

Description of Operations/Locations/Vehicles:
Should any of the above described be cancelled before the expiration date thereof, the issuing insurer will mail 30 days written notice to the certificate holder named, but failure to do so shall impose no obligation or liability of any kind upon the insurer, its agents or representatives

The Additional Insured &/or Waiver of Subrogation shown on this certificate are added provided this status is required by a written and executed contract

© 2008 ACORD CORPORATION. All rights reserved.

The ACORD name and logo are registered marks of ACORD

CHUBB®

Liability Insurance

Endorsement

Policy Period	OCTOBER 7, 2020 TO OCTOBER 7, 2021
Effective Date	OCTOBER 7, 2020
Policy Number	3602-86-48 LIO
Insured	CLEVER DEVICES LTD
Name of Company	FEDERAL INSURANCE COMPANY
Date Issued	OCTOBER 16, 2020

This Endorsement applies to the following forms:

GENERAL LIABILITY

Under Who Is An Insured, the following provision is added.

Who Is An Insured

Additional Insured - Scheduled Person Or Organization

Persons or organizations shown in the Schedule are **insureds**; but they are **insureds** only if you are obligated pursuant to a contract or agreement to provide them with such insurance as is afforded by this policy.

However, the person or organization is an **insured** only:

- if and then only to the extent the person or organization is described in the Schedule;
- to the extent such contract or agreement requires the person or organization to be afforded status as an **insured**;
- for activities that did not occur, in whole or in part, before the execution of the contract or agreement; and
- with respect to damages, loss, cost or expense for injury or damage to which this insurance applies.

No person or organization is an **insured** under this provision:

- that is more specifically identified under any other provision of the Who Is An Insured section (regardless of any limitation applicable thereto).
- with respect to any assumption of liability (of another person or organization) by them in a contract or agreement. This limitation does not apply to the liability for damages, loss, cost or expense for injury or damage, to which this insurance applies, that the person or organization would have in the absence of such contract or agreement.

CHUBB®

Liability Endorsement
(continued)

Under Conditions, the following provision is added to the condition titled Other Insurance.

Conditions

Other Insurance – Primary, Noncontributory Insurance – Scheduled Person Or Organization

If you are obligated, pursuant to a contract or agreement, to provide the person or organization shown in the Schedule with primary insurance such as is afforded by this policy, then in such case this insurance is primary and we will not seek contribution from insurance available to such person or organization.

Schedule

Persons or organizations that you are obligated, pursuant to a contract or agreement, to provide with such insurance as is afforded by this policy.

All other terms and conditions remain unchanged.

Authorized Representative

SUBCONTRACTOR/SUBCONSULTANT LIST
and
BIDDER STATUS

The Proposer shall provide information on ALL prospective subcontractor(s)/subconsultant(s) who submit bids/quotations in support of this solicitation. Use additional sheets as necessary.

IDENTIFY EVERY SUBCONTRACTOR(S)/ SUBCONSULTANT(S)	SCOPE OF WORK TO BE PERFORMED	CERTIFIED D/M/WBE FIRM? (Check all that apply)	PERVIOUS YEAR'S ANNUAL GROSS RECEIPT'S	UTILIZING ON THIS PROJECT
NAME: W.W. Gay Fire & Integrated Systems, Inc. ADDRESS: 2500 NE 18th Terrace Gainesville, FL 32609 PHONE: 352-380-0317 FAX: 352-378-1454 CONTACT PERSON: Steve Carter, Electrical Supervisor	SCOPE OF WORK: Equipment Installation AGE OF FIRM: 47 years	YES ____ NO: X IF YES, DBE ____ OR MBE ____ OR WBE ____	___ Less than $500K ___ $500K-$2 mil ___ $2 mil - $5 mil X more than $5 mil.	YES or NO
NAME: ____ ADDRESS: ____ PHONE: ____ FAX: ____ CONTACT PERSON:	SCOPE OF WORK: AGE OF FIRM: ____	YES ____ NO ____ IF YES, DBE ____ OR MBE ____ OR WBE ____	___ Less than $500K ___ $500K-$2 mil ___ $2 mil - $5 mil ___ more than $5 mil.	YES or NO
NAME: ____ ADDRESS: ____ PHONE: ____ FAX: ____ CONTACT PERSON:	SCOPE OF WORK: AGE OF FIRM: ____	YES ____ NO ____ IF YES, DBE ____ OR MBE ____ OR WBE ____	___ Less than $500K ___ $500K-$2 mil ___ $2 mil - $5 mil ___ more than $5 mil.	YES or NO

Check here if use of subcontractor(s)/subconsultant(s) is/are not applicable for this project: ☐

Name of Proposer: Clever Devices Ltd.

Name/Title of person completing this form: Francis J. Ingrassia, President

Is Proposer a DBE? ___ Yes X No If No, is Proposer a M/WBE? ___ Yes X No

Signature: [signature] Date: 4/28/2021

This page must be completed and uploaded to DemandStar.com with your Submittal.

#210009D

Form **W-9**
(Rev. November 2017)
Department of the Treasury
Internal Revenue Service

Request for Taxpayer Identification Number and Certification

▶ Go to *www.irs.gov/FormW9* for instructions and the latest information.

Give Form to the requester. Do not send to the IRS.

Print or type. See Specific Instructions on page 3.

1 Name (as shown on your income tax return). Name is required on this line; do not leave this line blank.
Clever Devices LTD

2 Business name/disregarded entity name, if different from above

3 Check appropriate box for federal tax classification of the person whose name is entered on line 1. Check only **one** of the following seven boxes.

☐ Individual/sole proprietor or single-member LLC ☑ C Corporation ☐ S Corporation ☐ Partnership ☐ Trust/estate

☐ Limited liability company. Enter the tax classification (C=C corporation, S=S corporation, P=Partnership) ▶

Note: Check the appropriate box in the line above for the tax classification of the single-member owner. Do not check LLC if the LLC is classified as a single-member LLC that is disregarded from the owner unless the owner of the LLC is another LLC that is **not** disregarded from the owner for U.S. federal tax purposes. Otherwise, a single-member LLC that is disregarded from the owner should check the appropriate box for the tax classification of its owner.

☐ Other (see instructions) ▶

4 Exemptions (codes apply only to certain entities, not individuals; see instructions on page 3):

Exempt payee code (if any)

Exemption from FATCA reporting code (if any)

(Applies to accounts maintained outside the U.S.)

5 Address (number, street, and apt. or suite no.) See instructions.
300 Crossways Park Drive

Requester's name and address (optional)

6 City, state, and ZIP code
Woodbury, NY 11797

7 List account number(s) here (optional)

Part I Taxpayer Identification Number (TIN)

Enter your TIN in the appropriate box. The TIN provided must match the name given on line 1 to avoid backup withholding. For individuals, this is generally your social security number (SSN). However, for a resident alien, sole proprietor, or disregarded entity, see the instructions for Part I, later. For other entities, it is your employer identification number (EIN). If you do not have a number, see *How to get a TIN,* later.

Note: If the account is in more than one name, see the instructions for line 1. Also see *What Name and Number To Give the Requester* for guidelines on whose number to enter.

Social security number
☐☐☐ – ☐☐ – ☐☐☐☐

or

Employer identification number
1 1 – 2 9 0 8 7 8 1

Part II Certification

Under penalties of perjury, I certify that:

1. The number shown on this form is my correct taxpayer identification number (or I am waiting for a number to be issued to me); and
2. I am not subject to backup withholding because: (a) I am exempt from backup withholding, or (b) I have not been notified by the Internal Revenue Service (IRS) that I am subject to backup withholding as a result of a failure to report all interest or dividends, or (c) the IRS has notified me that I am no longer subject to backup withholding; and
3. I am a U.S. citizen or other U.S. person (defined below); and
4. The FATCA code(s) entered on this form (if any) indicating that I am exempt from FATCA reporting is correct.

Certification instructions. You must cross out item 2 above if you have been notified by the IRS that you are currently subject to backup withholding because you have failed to report all interest and dividends on your tax return. For real estate transactions, item 2 does not apply. For mortgage interest paid, acquisition or abandonment of secured property, cancellation of debt, contributions to an individual retirement arrangement (IRA), and generally, payments other than interest and dividends, you are not required to sign the certification, but you must provide your correct TIN. See the instructions for Part II, later.

Sign Here Signature of U.S. person ▶ C Agostini Date ▶ 1/13/21

General Instructions

Section references are to the Internal Revenue Code unless otherwise noted.

Future developments. For the latest information about developments related to Form W-9 and its instructions, such as legislation enacted after they were published, go to *www.irs.gov/FormW9.*

Purpose of Form

An individual or entity (Form W-9 requester) who is required to file an information return with the IRS must obtain your correct taxpayer identification number (TIN) which may be your social security number (SSN), individual taxpayer identification number (ITIN), adoption taxpayer identification number (ATIN), or employer identification number (EIN), to report on an information return the amount paid to you, or other amount reportable on an information return. Examples of information returns include, but are not limited to, the following.

- Form 1099-INT (interest earned or paid)
- Form 1099-DIV (dividends, including those from stocks or mutual funds)
- Form 1099-MISC (various types of income, prizes, awards, or gross proceeds)
- Form 1099-B (stock or mutual fund sales and certain other transactions by brokers)
- Form 1099-S (proceeds from real estate transactions)
- Form 1099-K (merchant card and third party network transactions)
- Form 1098 (home mortgage interest), 1098-E (student loan interest), 1098-T (tuition)
- Form 1099-C (canceled debt)
- Form 1099-A (acquisition or abandonment of secured property)

Use Form W-9 only if you are a U.S. person (including a resident alien), to provide your correct TIN.

If you do not return Form W-9 to the requester with a TIN, you might be subject to backup withholding. See What is backup withholding, *later.*

- DBE utilization established for the Contract;
- Total value of expenditures with DBE firms for the quarter;
- The value of expenditures with each DBE firm for the quarter by race and gender;
- Total value of expenditures with DBE firms from inception of the Contract; and
- The value of expenditures with each DBE firm from the inception of the Contract by race and gender.

Reports and other correspondence must be submitted to the RTS DBE Coordinator with copies provided to the Procurement Division. Reports shall continue to be submitted quarterly until final payment is issued or until DBE participation is completed.

The successful Proposer shall permit:

- The City of Gainesville to have access to necessary records to examine information as the City of Gainesville deems appropriate for the purpose of investigating and determining compliance with this provision, including, but not limited to, records of expenditures, invoices, and contract between the successful Proposer and other DBE parties entered into during the life of the Contract.
- The authorized representative(s) of the City of Gainesville, the U.S. Department of Transportation, the Comptroller General of the United States, to inspect and audit all data and record of the Contractor relating to its performance under the Disadvantaged Business Enterprise Participation provision of this Contract.
- All data/record(s) pertaining to DBE shall be maintained as stated in 8.7 of the Contract document.

Sanctions for Violations

If at any time the City of Gainesville has reason to believe that the Contractor is in violation of its obligations under this Agreement or has otherwise failed to comply with terms of this Section, the City of Gainesville may, in addition to pursuing any other available legal remedy, commence proceedings, which may include but are not limited to, the following:

- Suspension of any payment or part due the Contractor until such time as the issues concerning the Contractor's compliance are resolved; and
- Termination or cancellation of the Contract, in whole or in part, unless the successful Contractor is able to demonstrate within a reasonable time that it is in compliance with the DBE terms stated herein.

DBE Utilization Form

The undersigned Proposer has satisfied the requirements of the solicitation in the following manner (please check the appropriate space):

___0___ The Proposer is committed to a minimum of ___0___% DBE utilization on this contract.

_____ The Proposer (if unable to meet the DBE goal of %) is committed to a minimum of _____% DBE utilization on this contract and submits documentation demonstrating good faith efforts.

DBE Participation Schedule

The Proposer shall complete the following information for all DBE's participating in the contract that comprises the DBE Utilization percent stated in the DBE Utilization Form. The Proposer shall also furnish the name and telephone number of the appropriate contact person should the Authority have any questions in relation to the information furnished herein.

DBE Identification and Information Form

Name and Address	Contact Name and Telephone Number	Participation Percent (Of Total Contract Value)	Description Of Work To Be Performed	Race and Gender of Firm
None				

G. ENERGY CONSERVATION

Refer to 42 U.S.C. 6321 et seq., and 49 C.F.R. part 622, subpart C.

ADDENDUM NO. 1

Date: April 6, 2021

Bid Due Date: April 29, 2021, 3:00 P.M. (Local Time)

Bid Name: Digital Signage and Content Management Software

Bid Number: RTSX-210030-DS

NOTE: This Addendum has been issued to the holders of record of the specifications.

The original Specifications remain in full force and effect except as revised by the following changes which shall take precedence over anything to the contrary:

1. The following information was shared with attendees at today's pre-proposal meeting:

   - This is a non-mandatory meeting.
   - The cone of silence (blackout period) began once the bid was released and continues until contract award. No lobbying or discussions can occur between bidder and any representative of the City or GRU, except the designated procurement staff contact; otherwise, your bid will be disqualified.
   - Verbal instruction does not change the terms of the solicitation – changes will only be made via written addenda. Questions/Answers and topics of discussion addressed at this pre-proposal will be available in an addendum for download through DemandStar.
   - Send questions in writing via email only to me. Submit final questions by April 16, 2021.
   - Upload your response in pdf format before the due date and time.
     - Be sure to sign and include all Addenda.
   - Upload response to DemandStar by April 29, 2021, 3pm (local time). The platform does not accept late submittals.

2. Q&A (includes questions received via email before the meeting:

   Question1: Will a single, dual-sided unit be sufficient to meet your qualifications for Rosa Parks?
   Answer1: ***Yes.***

Question2: Will it be sufficient for us to quote this one dual-sided unit – and plan for deployment at Location #3 – as depicted on p. 62 of the RFP?

Answer2: ***Location #3 is our third choice for install if preferred locations #1 or #2 are not viable options.***

Question3: While there is a "Power Source" depicted in the photo of Location #3 on p. 62, there is no such depiction on p. 60 (Location #1) or on p. 61 (Location #2) – If we are to plan for deployment at either of these locations, where are the electrical sources located?

Answer3: ***The breaker box is located inside the ticket office at the south end of the transfer station. There are electrical junction boxes under the pavers at preferred locations #1 and #2 which has conduit running to the breaker box in the ticket office. The power source depicted in the picture on p. 62 is the light, which is on a timer.***

Question4: Do you have a preference for LCD or Epaper monitor?

Answer4: ***No preference; whichever looks like it will work for us.***

Question5: Bus maps may sow in real time. Will this be a link from a webpage?

Answer5: ***Yes, we will provide the data, either webpage or API. API, but bus maps not required in new RFP; just arrival and departure information.***

Question6: How is output of data, HTML?

Answer6: ***This is related to display of bus map, which is not required in this new RFP.***

Question7: Wasn't map request removed for this bid?

Answer7: ***Yes, it has been removed from this bid.***

Question8: Arrival/Departure data. We will rely on source provided? We will not estimate?

Answer8: ***Yes, that is correct.***

Question9: Interactive concepts – from viewer, limited to receiving ADA audio (on/off), stated messages will have audio output to alert people outside with video?

Answer9: ***We want ADA function and emergency alerts, if possible. ADA functions is a mandatory feature. Emergency alerts and advertising sound, if possible.***

Question10: Any information from previous two bids available?

Answer10: ***All relevant Q&A from previous bids were included in this RFP document; refer to the end of the specifications section.***

3. Find attached:

- Prohibition of lobbying in procurement matters
- Pre-Proposal Meeting Registration Report

ACKNOWLEDGMENT: Each Proposer shall acknowledge receipt of this Addendum No. 1 by his or her signature below, **and shall attach a copy of this Addendum to its proposal.**

CERTIFICATION BY PROPOSER

The undersigned acknowledges receipt of this Addendum No. 1 and the Proposal submitted is in accordance with information, instructions, and stipulations set forth herein.

PROPOSER: Clever Devices Ltd.

BY: Francis J. Ingrassia

DATE: 4/27/2021

41-424 Prohibition of lobbying in procurement matters

Except as expressly set forth in Resolution 060732, Section 10, during the cone of silence (formerly black out period) as defined herein no person may lobby, on behalf of a competing party in a particular procurement process, City Officials or employees except the purchasing division, the purchasing designated staff contact. Violation of this provision shall result in disqualification of the party on whose behalf the lobbying occurred.

Black out period means the period between the issue date which allows for immediate submittals to the City of Gainesville Purchasing Department for an invitation for bid or the request for proposal, or qualifications, or information, or the invitation to negotiate, as applicable, and the time the City Officials and Employee awards the contract.

Lobbying means when any natural person for compensation, seeks to influence the governmental decision making, to encourage the passage, defeat, or modification of any proposal, recommendation or decision by City Officials and Employees, except as authorized by procurement documents.

First Name	Last Name	Email	Registration Time	Approval Status
Tom	Jacob	tjacob@evogence.com	3/12/2021 13:59	approved
DJ	Hammingh	djhammingh@etatransit.com	3/12/2021 16:33	approved
Bob	Parrish	bparrish@bcifl.net	3/15/2021 15:27	approved
Matthew	Parker	mparker@visix.com	3/16/2021 9:43	approved
Nathalie	Ricci	nathalie@buspas.com	3/19/2021 11:30	approved
Christian	Waller	christian.waller@bounteous.com	4/1/2021 14:07	approved
Jon	Day	jd1416@att.com	4/2/2021 16:08	approved
Sandro	Natale	sn921r@att.com	4/2/2021 17:20	approved
Johnna	McQuinn	jmcquinn@cleverdevices.com	4/5/2021 13:39	approved
Dan	Bartolucci	Dbartolucci@redmon.com	4/5/2021 16:35	approved
Kenneth	Cline	kcline@redmon.com	4/5/2021 16:48	approved
John	Redmon	john@redmon.com	4/5/2021 19:55	approved
Steve	Chapman	schapman@redmon.com	4/5/2021 21:09	approved
George	Cone	gcone@alpinesy.com	4/6/2021 7:56	approved
Roy	Darnold	darnoldrt@cityofgainesville.org	4/6/2021 8:56	approved
Sean	Koljonen	sean.koljonen@acquia.com	4/6/2021 9:02	approved

ADDENDUM NO. 2

Date: April 20, 2021

Bid Due Date: April 29, 2021, 3:00 P.M. (Local Time)

Bid Name: Digital Signage and Content Management Software

Bid Number: RTSX-210030-DS

NOTE: This Addendum has been issued to the holders of record of the specifications.

The original Specifications remain in full force and effect except as revised by the following changes which shall take precedence over anything to the contrary:

1. The question submittal deadline has passed; no additional questions will be answered.

2. Q&A:

Question1: Regarding the API for the bus arrival/departure information: What is the connection to the API? Is there a database such as xml, sql, or does the API output the data as a text file?

Answer1: ***The API uses XML or JSON document.***

The BusTime® Developer API is a web service that uses HTTP/1.1 as its application protocol. Each type of call or request that can be made to the API is represented by a unique URL. Requests are made to the API using HTTP GET calls to the appropriate URL. Parameters are encoded in the HTTP GET request by following the URL with a "?" and "argument=value" pairs separated by "&".

A response is returned as a well-formed XML document with a Content-Type of "text/xml", or as a JSON document with a Content-Type of "application/json".

3. Find attached:

- Prohibition of lobbying in procurement matters

ACKNOWLEDGMENT: Each Proposer shall acknowledge receipt of this Addendum No. 2 by his or her signature below, **and shall attach a copy of this Addendum to its proposal.**

CERTIFICATION BY PROPOSER

The undersigned acknowledges receipt of this Addendum No. 2 and the Proposal submitted is in accordance with information, instructions, and stipulations set forth herein.

PROPOSER: Clever Devices Ltd.

BY: Francis J. Ingrassia

DATE: 4/28/2021

41-424 Prohibition of lobbying in procurement matters

Except as expressly set forth in Resolution 060732, Section 10, during the cone of silence (formerly black out period) as defined herein no person may lobby, on behalf of a competing party in a particular procurement process, City Officials or employees except the purchasing division, the purchasing designated staff contact. Violation of this provision shall result in disqualification of the party on whose behalf the lobbying occurred.

Black out period means the period between the issue date which allows for immediate submittals to the City of Gainesville Purchasing Department for an invitation for bid or the request for proposal, or qualifications, or information, or the invitation to negotiate, as applicable, and the time the City Officials and Employee awards the contract.

Lobbying means when any natural person for compensation, seeks to influence the governmental decision making, to encourage the passage, defeat, or modification of any proposal, recommendation or decision by City Officials and Employees, except as authorized by procurement documents.

F. APPENDIX 2: SAMPLE END-USER LICENSE AGREEMENT (EULA)

On the following pages, please find a sample End-User License Agreement (EULA) for RTS' review.

END USER SOFTWARE LICENSE AGREEMENT
INTERACTIVE USER

Notice to User:

IMPORTANT – READ CAREFULLY: This End-User License Agreement ("EULA") is a legal agreement between you (an individual or entity who is the registered user of the Software Product as licensee and references herein to "You" and "Your" refer to you as licensee) and Clever Devices Ltd. ("Clever Devices"), its suppliers and licensors. This EULA governs the software that accompanies this EULA (the "Software Product"). The Software Product may contain embedded or pre-loaded software or other software provided on media such as a tape, diskette, CD, DVD, or thumb or flash drive. Furthermore, the Software Product may include third party software which Clever Devices does not own but is licensed to distribute. The terms of this EULA apply to any such third party software and are expressly intended to confer third party beneficiary status on such third party software providers to enforce this EULA's terms. By installing, copying, downloading, accessing or otherwise using or allowing your employees, contractors or agents to use the Software Product, You agree to be bound by the terms of this EULA. If You do not agree to the terms of this EULA, You are not licensed to use the Software Product and You must not use and must return any tangible copies of the Software Product in Your possession or control to Clever Devices.

1. Grant of License. Subject to the terms and conditions of this EULA, Clever Devices hereby grants to You a number of limited, non-exclusive, revocable, non-transferable, non-sublicensable licenses (each a "License") to use the Software Product. This EULA grants You the right to use the Software Product in the appliance in which it is embedded (the "Designated Environment") which is the system provided by Licensee and approved by Clever Devices as amended or supplemented from time to time pursuant to the terms of this EULA for the Software Product.

2. Restrictions. Except as expressly permitted under this EULA, You will not, directly or indirectly, and will not allow any third party to: (a) copy the Software Product (except for one (1) copy for archival backup and disaster recovery purposes),rent, lease, resell, loan, sublicense, distribute, assign, or otherwise transfer rights to the Software Product, except as otherwise provided herein; (b) modify, translate, adapt, alter, or create derivative works based on the Software Product; (c) merge the Software Product with any other software or documentation; (d) reverse engineer, decompile, disassemble, or otherwise attempt to derive the source code or underlying ideas or algorithms of the Software Product (including without limitation communication protocols used by the Software); (e) distribute, sublicense, rent, lease, assign or loan the Software Product to any third party; (f) use or allow the use of the Software Product for the business needs of another person or entity, including without limitation, providing outsourcing, service bureau, commercial hosting, application service provider or on-line services to third parties; or (g) use or allow the transfer, transmission, export, or re-export of the Software Product in violation of any export control laws or regulations administered by the U.S. Commerce Department, OFAC, or any other

government agency. You may not remove, alter or obscure any proprietary notices (or metadata tags) or trademarks that appear on the Software Product or on any copies made in accordance with this EULA.

3. End User Responsibility For Content. You will display content of your choice which may include content you own and/or content You have procured from third party sources. You acknowledge and agree that Clever Devices is not responsible for the legality or accuracy of the particular content You choose to display or the availability of any third party content sources. Clever Devices does not endorse any materials available from such sources. You acknowledge and agree that Clever Devices is not liable for any loss or damage which may be incurred by You as a result of the content You display, or as a result of any reliance placed by You on the completeness, accuracy or existence of any content available from such third-party sources. You agree that You shall not push and/or store sensitive, personal identifiable information and/or Confidential Information to any environment hosted by Clever Devices.

4. Ownership. The Software Product is licensed, not sold, to You for use solely subject to the terms and conditions of this EULA. The Software and all worldwide intellectual property and proprietary rights therein and relating thereto, are and will remain the exclusive property of Clever Devices or its licensors, if any. Except for the limited rights expressly granted under Section 1, You will have no right, title or interest (whether by implication, estoppel, or otherwise) in or to the Software Product or any Intellectual Property Rights (as defined below) of Confidential Information (as defined below) therein or thereto. Clever Devices and applicable third party software providers retain all rights, title and interest in and to any and all trademarks and logos displayed on or in the Software Product. You agree not to challenge or contest Clever Devices' and applicable third party software provider's rights to or ownership of, or otherwise attempt to assert any rights in, the Software Product. "Intellectual Property Rights" as used in this EULA means all worldwide patent, patent applications, copyrights, trade secrets, trademarks, service marks, trade names and any other intellectual property, proprietary, and database protection rights and includes all Confidential Information of Clever Devices and third party software providers (as defined in Section 17 below).

5. Demo Software Product. In the event the Software Product has been provided as a demonstration copy of the Software Product, whether for a fee or at no charge, the terms of this Section 4 and of this EULA in its entirety shall apply. Your license to use the Software Product shall expire 120 days after installation. In the event the demonstration copy of the Software Product was provided to You at no charge, for purposes of the total liability limitation set forth in the Section entitled "Limitation of Liability" the "amount actually paid by You" shall be deemed to be the Clever Devices' list price for the Software Product.

6. Updates and Upgrades. Updated or upgraded versions of the Software Product may be created or issued by Clever Devices from time to time. If the Software Product is an update or upgrade of a Clever Devices product, You are bound by the terms of this EULA and may only use that updated or upgraded

Software Product in accordance with this EULA. Clever Devices may, at its sole discretion, require the installation of software updates or upgrades to maintain the warranty provision contained herein.

7. Software Transfer – Internal Transfer. You may move the Software Product to a different system as long as You permanently remove the Software Product from the initial system.

8. Version Restrictions: You acknowledge that if the Software Product is identified as a "beta" version ("Beta Software") it is provided to You solely as a convenience for You and for testing purposes. Beta Software may or may not include additional features or functionality currently under development for inclusion in the Software Product, but is not currently supported by Clever Devices. You acknowledge that Beta Software will not be supported and You acknowledge that Clever Devices is not responsible for any damages (consequential or actual) related to Your use of Beta Software. You covenant to treat all Beta Software as Software, including, but not limited to, the restrictions on use set forth in Section 2.

Your license to use the Software Product shall expire on the date set forth in the Beta Site Agreement signed by You or, in the absence of such agreement, 120 days after installation. The Software Product may contain more or less features than the commercial release of the software Clever Devices ultimately intends to distribute. While Clever Devices may intend to distribute a commercial release of the Software Product, Clever Devices reserves the right at any time not to release a commercial release of the Software Product or, if released, to alter any and all features, specifications, capabilities, functions, licensing terms, release dates, general availability or other characteristics of the commercial release. You agree that the beta release or pre-release versions may not be suitable for production use and may contain errors affecting their proper operation. In the event the beta or pre-release of the Software Product was provided to You at no charge, for purposes of the total liability limitation set forth in the Section entitled "Limitation of Liability" the "amount actually paid by You" shall be deemed to be Clever Devices' list price for the Software Product, or other amount as expressly stated in any Beta Site Agreement signed by You and Clever Devices.

9. Maintenance, Support Services, Updates and Upgrades. Clever Devices does not provide any maintenance or support services with respect to the Software Product, except subscription based maintenance and support services pursuant to a separately negotiated and mutually agreed upon maintenance and support subscription agreement. If applicable, You may be required to provide access to your network and/or systems as may be necessary for the provision of the support service. You acknowledge that the efficacy of any such service may be adversely impacted by your decision to refuse such access. If You would like a copy of such maintenance and support subscription agreement, please contact Clever Devices.

10. License Fee. You acknowledge that in consideration of Your acceptance of the terms and conditions of this EULA and other good, valuable and sufficient consideration including if applicable the fees

("Fees") You have paid to Clever Devices for the Software Product, Clever Devices grants You the license for the Software Product, upon and subject to the various terms and conditions set forth in this EULA.

11. Term and Termination. The term of this EULA will begin on the Effective Date and shall continue unless terminated by Clever Devices. This EULA and all licenses will terminate if You fail to comply with the terms and conditions of this EULA. Upon notice of termination, or if a license ceases to be effective, You shall immediately, at Clever Devices' option, destroy or return to Clever Devices at Your expense, the Software Product, all copies of thereof, any updates, and all Clever Devices documentation and materials, and, upon the request of Clever Devices, certify in writing Your compliance with the terms and conditions of this Section 10. This EULA will also automatically terminate if You breach a material term or condition of this EULA, including without limitation Your payment obligation. Sections 3, 11, 12, 13, 15, 16, 17 and 21 shall survive termination or expiration of this EULA.

You acknowledge that the provisions of this EULA restricting the use and disclosure of the Software Product and Confidential Information set forth in Section 17 will survive the expiration and any termination of this EULA and that, in the event of Your material breach of such provisions, Clever Devices would suffer irreparable harm and would have no adequate remedy without injunctive or other equitable relief in addition to any other remedy available at law or in equity.

12. Limited Warranty and Disclaimer. Clever Devices warrants that (a) the Software Product will perform substantially in accordance with the accompanying written materials for a period of ninety (90) days from the date of receipt, and (b) any hardware accompanying the Software Product will be free from defects in materials and workmanship under normal use and service for a period of one (1) year from the date of receipt. To the extent allowed by applicable law, implied warranties on the Software Product is limited to ninety (90) days as provided in clauses (a) and (b) in this Section 11 and any other Clever Devices software and hardware, if any, are limited to ninety (90) days and one (1) year respectively. This warranty only covers problems reported in writing to Clever Devices during the applicable warranty period. For customers outside the United States, this limited warranty set out in this Section 11 shall be construed to limit the warranty to the minimum warranty required by law.

13. Remedies. Clever Devices', third party software providers' and their respective suppliers' entire liability and Your exclusive remedy shall be, at Clever Devices' option, either (a) return of the price paid, or (b) repair or replacement of the Software Product or, if applicable, any other Clever Devices software or hardware (collectively with the Software Product, the "Licensed Product") that does not meet Clever Devices' limited warranty and which is returned to Clever Devices with a copy of Your documentation of receipt. This limited warranty is void if failure of the Licensed Product has resulted from accident, abuse, or misapplication. Any replacement software or hardware will be warranted for the remainder of the original warranty period or thirty (30) days, whichever is longer. Outside the United States, none of these remedies

and no product support services offered by Clever Devices are available without proof of purchase from an authorized international source.

You acknowledge and agree that any Clever Devices' software and hardware that sold together and are configured as a system for proper operation and that these systems are not intended for use with any other commercially available or custom hardware and software. Installation of any other software onto the hardware, changes to computer hardware configuration, changes to or deletion of specific product related software, and operating system configuration without the express written approval of Clever Devices will void the warranty. Use of the Licensed Product or any Clever Devices' system for any other applications aside from the specific contracted product will void the warranty.

You agree that you will not modify the Licensed Product without the express written approval by or in accordance with written instructions from an authorized Clever Devices employee and You acknowledge that any modification without such approval or that is not in compliance with such written instructions may not be fully compatible with program updates made generally available by Clever Devices. Notwithstanding anything in this EULA to the contrary, Clever Devices may at its sole discretion, cooperate in the approval of proposed modifications to the Licensed Product, at Your sole risk, cost and expense and provide You with suitable documentation of any such approval or decide not to approve or cooperate in any such requested modification.

14. No Other Warranties. EXCEPT FOR THE LIMITED WARRANTY PROVIDED IN SECTION 11 ABOVE, THE LICENSED PRODUCT IS PROVIDED "AS IS". CLEVER DEVICES MAKES NO WARRANTIES WITH RESPECT TO ANY LICENSED PRODUCT AND DISCLAIMS ALL STATUTORY OR IMPLIED WARRANTIES, INCLUDING WITHOUT LIMITATION WARRANTIES OF MERCHANTABILITY, FITNESS FOR A PARTICULAR PURPOSE, OR ARISING FROM A COURSE OF DEALING OR USAGE OF TRADE AND ANY WARRANTIES OF NON-INFRINGEMENT. CLEVER DEVICES DOES NOT WARRANT THAT THE LICENSED PRODUCT WILL MEET ANY REQUIREMENTS OR THAT THE OPERATION OF THE LICENSED PRODUCT WILL BE UNINTERRUPTED OR ERROR FREE. ANY LIABILITY OF CLEVER DEVICES WITH RESPECT TO THE LICENSED PRODUCT OR THE PERFORMANCE THEREOF UNDER ANY WARRANTY, NEGLIGENCE, STRICT LIABILITY OR OTHER THEORY WILL BE LIMITED EXCLUSIVELY TO THE REMEDIES SPECIFIED IN THIS EULA. SOME JURISDICTIONS DO NOT ALLOW THE EXCLUSION OF IMPLIED WARRANTIES OR LIMITATIONS ON HOW LONG AN IMPLIED WARRANTY MAY LAST, SO THE ABOVE LIMITATIONS MAY NOT BE APPLICABLE. WITHOUT LIMITING THE GENERALITY OF THE FOREGOING, THE PARTIES SPECIFICALLY WAIVE AND DISCLAIM THE APPLICABLITY OF (I) THE UNITED NATIONS CONVENTION OF THE SALE OF GOODS AND (II) ANY INCOTERMS.

15. Consent to Use of Data. By transmitting, storing, copying, distributing, displaying, editing, deleting, modifying, publishing, translating, processing or otherwise using the Licensed Product for data provided by You, You will be deemed to have (i) represented and warranted to Clever Devices and its

licensors that you have all rights, titles, and interests of any kind or nature whatsoever, in and to such data for such purpose, and (ii) grant to Clever Devices a royalty-free, worldwide, transferable, sub-license, right and license to transmit, store, copy, distribute, display, edit, delete, modify, publish, translate, process or otherwise use such data for all purposes related to the performance of this EULA by Clever Devices. You agree that Clever Devices may (i) obtain and use data collected as part of the support services provided to You, if any, related to the Licensed Product and (ii) use such data for business purposes to optimize and improve our products or to provide customized services or technologies to You and, except for such data that has been aggregated and anonymized, will not disclose this information to third parties without Your written consent.

16. Limitation of Liability. THE LIABILITY OF CLEVER DEVICES AND OF ANY THIRD PARTY SOFTWARE PROVIDERS UNDER THIS EULA, REGARDLESS OF THE BASIS OF LIABILITY OR THE FORM OF ACTION, WILL NOT EXCEED THE FEES PAID TO CLEVER DEVICES FOR THE PORTION OF THE LICENSED PRODUCT OR SERVICES CAUSING THE LIABILITY. IN NO EVENT WILL CLEVER DEVICES BE LIABLE FOR ANY INDIRECT, SPECIAL, INCIDENTAL OR CONSEQUENTIAL DAMAGES, HOWEVER CAUSED, WHETHER FOR BREACH OF CONTRACT, NEGLIGENCE OR OTHERWISE, AND REGARDLESS OF WHETHER CLEVER DEVICES HAS BEEN ADVISED OF THE POSSIBILITY OF THOSE DAMAGES, INCLUDING WITHOUT LIMITATION, THE USE OR INABILITY TO USE THE LICENSED PRODUCT, OR ANY RESULTS OBTAINED FROM OR THROUGH THE LICENSED PRODUCT. CLEVER DEVICES WILL NOT BE LIABLE FOR ANY NETWORK-RELATED PROBLEMS ATTRIBUTABLE TO THE LICENSED PRODUCT OR CHANGES TO NETWORK CONFIGURATION THAT MAY AFFECT THE PERFORMANCE OF THE LICENSED PRODUCT.

17. Indemnification. You will indemnify, defend, and hold harmless Clever Devices, its licensors, and each of their respective employees, officers, directors, and affiliates ("Indemnified Parties"), from any and all claims, investigations, losses, liabilities, damages, fees, expenses and costs (including all attorneys' fees, court costs, damage awards, and settlement amounts) which result from any claim or allegation against any Indemnified Party arising from Your use of the Licensed Product or Your breach of any term of this EULA. Clever Devices will provide You with notice of any such claim or allegation, and Clever Devices will have the right to participate in the defense of any such claim at its expense.

18. Confidential Information. (a) You acknowledge that the Licensed Product contains proprietary, trade secret and confidential information belonging exclusively to Clever Devices or to applicable third party software providers, including without limitation the source code, inventions, algorithms, knowhow and other proprietary information contained therein (collectively, "Confidential Information"). Title to, ownership of and all proprietary rights in the Licensed Product, the Confidential Information and all copies and extracts thereof, including translations or compilations or partial copies, are reserved to and will at all times remain with Clever Devices. Further, any modifications made to the Clever Devices Licensed Product or the Confidential Information, including those suggested by You, shall be the property of Clever Devices. (b) You shall not make the Licensed Products, or any other licensed products of Clever Devices' or its software

or the ideas, techniques and concepts contained therein or any other Confidential Information available to any third party without the prior written consent of Clever Devices; copy the Clever Devices' Licensed Product, the Confidential Information or any portion thereof, except in either case as necessary for the use in the Designated Environment for archival or back-up purposes or disaster recovery purposes. (c) You agree to operate the Licensed Product solely in connection with Your business purpose and in the Designated Environment and take commercially reasonable precautions, consistent with Your existing practices with regard to Your own data and programs, to maintain security in order to prevent unauthorized use or disclosure of the Licensed Product or Confidential Information. You shall inform Your employees, contractors and agents having access to the Licensed Product or any other licensed products of Clever Devices or the Confidential Information of Your limitations, duties and obligations regarding the use, disclosure and copying of the Licensed Product and the Confidential Information. You agree to maintain the integrity of all patent, copyright, trade secret or other proprietary notices of Clever Devices in the Licensed Product and in any other licensed products of Clever Devices' displayed with, affixed to or imprinted on physical media and embodiments thereof, and to take no action inconsistent with the patent, copyright and trade secret ownership rights of Clever Devices. You will not use the Confidential Information for any purpose other than in connection with Your use of the Licensed Product under this EULA. Except as otherwise set forth in this EULA, under no circumstances will You allow any third party to have access to the Licensed Product or Confidential Information. (d) In either performing or approving modifications to any source code delivered by Clever Devices to You in connection with the Licensed Product, or in providing any additional services to You, including without limitation, any diagnostic or corrective actions required in connection with responding to reported defects, Clever Devices acknowledges that it may have access to Your proprietary, trade secret or confidential information. Title to, ownership of an all proprietary rights in Your information is and shall remain Yours. Clever Devices shall not disclose any such Confidential Information to any third party and shall not make or retain any records or copies of any such information, unless otherwise agreed to in writing by You and Clever Devices. (e) You shall not attempt or permit any employee, agent, contractor or any person to attempt any reverse compilation or reverse engineering of the Licensed Product, any other licensed product or module or Confidential Information of Clever Devices for any purpose or any reason.

19. Assignment. You may not assign, delegate or otherwise transfer this EULA or any of Your rights or obligations under this EULA without the prior written consent of Clever Devices. Unless specifically authorized in writing by Clever Devices, assignment of this EULA will not release You from any prior outstanding obligation under this EULA or allow You or Your assignee to expand the number of installations of the Licensed Product authorized under this EULA. This EULA is freely assignable by Clever Devices and will inure to the benefit of Clever Devices' successors and assigns. Any assignment in violation of this Section 18 is null and void.

20. Audit Rights. For good cause, upon five (5) business days' notice to You and during normal business hours, Clever Devices shall have the right, at Clever Devices' expense, to audit Your computer system records at their place of keeping, for the purpose of assuring Your compliance with the terms of this EULA. In performing such audit, Clever Devices shall fully cooperate with You in order that any such audit does not interfere with or affect Your ongoing operations. In the event a breach of this EULA is discovered as a result of an audit under this Section 19, the costs of the audit will be borne by You.

21. United States Government Restricted Rights. The Licensed Product is comprised of "Commercial Computer Software" and "Commercial Computer Software Documentation," as such terms are used in 48 C.F.R. 12.212 or 48 C.F.R. 227.7202, as applicable. Consistent with 48 C.F.R. 12.212 or 48 C.F.R. 227.7202-1 through 4, as applicable, the Commercial Computer Software and Commercial Computer Software Documentation are licensed to any U.S. Government customers: (a) only as Commercial Items; and (b) with only those rights as are granted to all other customers pursuant to the terms of this EULA. The contractor/manufacturer is Clever Devices Ltd., 300 Crossways Park Drive, Woodbury, New York 11797.

22. Additional Terms. If any term or other provision of this EULA is invalid, illegal or incapable of being enforced by any rule of law or public policy, all other conditions and provisions of this EULA shall nevertheless remain in full force and effect. Upon such determination that any term or other provision is invalid, illegal or incapable of being enforced, the parties hereto shall negotiate in good faith to modify this EULA so as to effect the original intent of the parties as closely as possible to the fullest extent permitted by applicable Law in an acceptable manner to the end that the transactions contemplated by this EULA are fulfilled to the extent possible. This EULA, including any order forms entered into contemporaneously herewith constitute the entire EULA, and supersede all prior EULAs and understandings, both written and oral, between the parties with respect to the subject matter of this EULA. Any amendments and/or modifications of this EULA will be binding upon the parties only if made in writing and signed authorized representatives of both parties. Under no circumstances will the preprinted terms of any purchase order or any other terms apply to this EULA. No waiver of any of the terms or conditions of this EULA will be binding for any purpose unless made in writing and signed by authorized representatives of both parties and any such waiver will be effective only in the specific instance and for the purpose given. No failure or delay on the part of either of the parties in exercising any right will operate as a waiver, nor will any single or partial exercise by the either of the parties of any right preclude any other or further exercise thereof or the exercise of any other right. All notices, consents and approvals under this EULA must be delivered in writing by personal delivery, electronic facsimile or certified mail, postage pre-paid, to the other party at its address set forth below or in the Purchase Order or at such other address as may be later designated by such party. Notices will be deemed to have been received upon the date of receipt or, in the case of certified mailing, three (3) days after deposit in the mail. This EULA will be governed by the laws of the State of New York without regard to conflicts of law principles. All disputes arising under this EULA must be brought in the

state and federal courts located in Nassau County, New York, as permitted by law. Each party irrevocably hereby consents to the exclusive jurisdiction and venue of any such court in any such action or proceeding. No agency, partnership, fiduciary relationship or joint venture is created by this EULA. The parties are and remain at all times independent contractors and not agents or employees of the other party.

By:	_____	By:	_____
Name:	_____	Name:	_____
Title:	_____	Title:	_____
Date:	_____	Date:	_____
LICENSEE:		LICENSOR: Clever Devices Ltd.	

Clever Devices

CLEVER DEVICES' TRADEMARKS

Clever Devices®
AVM®
AVA®
BusLink®
BusLink Switch®
BusTime®
BusTools®
CleverAnalytics®
CleverCAD®
CleverCare®
CleverCERT®
CleverCount®
CleverReports®
IncidentAnalytics®
IdleMonitor®
Intelligent Vehicle Network®
IVN®
PerfectNav®
Seymor®
SpeakEasy®
SmartYard®
Secure Bus Access®
Ridecheck Plus Software®
R+®
Ridecheck Plus®
RSM Services®
Mtram®
M.A.I.O.R.®

Note: All images used in this document are provided for example purposes only. Images may contain additional content outside of the proposed solution.